Form No. 380-0070 Rev E

Count on it.

Parts Catalog

Toro® Illustrated Parts Breakout Book

Model No. Parts Breakout Book

Register at www.Toro.com.
Original Instructions (EN)

CE

380-0070 E

Ordering Replacement Parts

To order replacement parts, please supply the part number, the quantity, and the description of each part desired.

Understanding Reference Numbers

Each identified part in an illustration has a reference number. The reference number for a part also appears in the parts list, along with other information about the part.

This catalog uses two special reference number formats, one to indicate parts in a service assembly and another to indicate the quantity of a given part in an illustration.

Service Assembly Reference Numbers

Parts in service assemblies have reference numbers in the form a:b. The a represents the reference number of the entire service assembly and the b represents a sequential number unique to each part within the service assembly.

For example, a wheel assembly might be identified by reference number 6, the tire by 6:1, the valve by 6:2, and the wheel by 6:3. When you order the assembly identified by reference number 6, you receive all parts identified by reference numbers 6:1,6:2, and 6:3. However, you may also order any part individually. Reference numbers of this type appear in illustration and in parts lists.

Reference Numbers Indicating Quantity

In an illustration, if a reference number indicates more than one part, the reference number has the form nX y. The n represents the quantity of the part, the X is the multiplication symbol, and the y represents the reference number.

For example, in an illustration, the reference number 2X 37 means that two of the parts identified by reference number 37 are indicated.

List of Abbreviations

AR: as required

ASM: assembly

BBC: blade brake control

BHTF: button head thread forming

CARR: carriage

CCW: counter clockwise

CW: clockwise

DEG: degrees

DPA: Dual Point Adjustment

ECM: electronic control module

EXT: external

FH: flat head

GA: gauge

HD: heavy-duty

HF: hex flange

HH: hex head

HHF: hex head flange

HHFTF: hex head flange thread forming

HJ: hex jam

HLH: hex lag head

HOC: height-of-cut

HP: high pressure

HSBH: hex socket button head

HSFH: hex socket flat head

HSH: hex socket head

HWH: hex washer head

HWHTF: hex washer head thread forming

HYD: hydraulic

LH: left hand

LP: low pressure

LPG: Liquefied Petroleum Gas

NI: nylon insert

NPTF: national pipe thread fine

PFH: phillips flat head

PPH: phillips pan head

PPHTF: phillips pan head thread forming

PRH: phillips round head

PTH: phillips truss head

PTO: power-take-off

RH: right hand

ROPS: roll-over protection system

RRB: rear roller brush

SFH: slotted fillister head

SHH: slotted hex head

SHWH: slotted hex washer head

SPH: slotted pan head

SQH: square head

SRH: slotted round head

STD: standard

TAP: self tapping

TTH: torx truss head

Contents

570Z 2-4 . . . 7
570Z-6 . . . 8
570Z-12 . . . 9
T5 Shrub . . . 10
T5 and T5 RapidSet, Lawn . . . 12
T5, High-Pop . . . 14
T7 . . . 16
300 Shrub . . . 18
300 Lawn . . . 20
300 High-pop . . . 22
300 and 340 Series Nozzles . . . 24
340 Shrub . . . 26
340 Lawn . . . 28
340 High-pop . . . 30
300 and 340 Series Nozzles . . . 32
S700 Shrub . . . 34
S700 Lawn . . . 36
S700 Commercial . . . 38
S700 High Pop . . . 40
S700 Nozzles . . . 42
V-1550-Shrub . . . 43
V-1550-4 components . . . 44
V-1550-12 . . . 46
TR50 Shrub . . . 48
TR50 Lawn . . . 50
TR50 High-pop . . . 52
TR50XT Shrub . . . 54
TR50XT Lawn . . . 56
TR50XT High-pop . . . 58
TR70P and TR70XT . . . 60
640 . . . 62
2001 . . . 66
S2001 . . . 68
590GF-4 and 590GF-6 . . . 70
590GF-12 . . . 71
720 Series Sprinkler . . . 72
720 Series Conversion Assembly . . . 74
720G Series . . . 75
810G and 810GL . . . 76
DT34 Series Sprinkler . . . 78
DT34B Series Sprinkler . . . 80
DT35 Series Sprinkler . . . 82
DT35B Series Sprinkler . . . 84
DT54 Series Sprinkler . . . 86
DT55 . . . 88
DT55 Ribless Body Conversion . . . 92
FLX34 Series Golf Sprinkler w/ Dual Trajectory . . . 94
FLX34B Series Sprinkler w/ Dual Trajectory . . . 96
FLX35 Series Golf Sprinkler w/ Dual Trajectory . . . 98
FLX35-6 Series Golf Sprinkler w/ 24-Pos TruJectory . . . 100
FLX35B Series Sprinkler w/ Dual Trajectory . . . 102
FLX35-6B Series Sprinkler w/ 24-Pos TruJectory . . . 104
FLX54 Series Golf Sprinkler w/ Dual Trajectory . . . 106
FLX54RB R Series Conversion w/ Dual Trajectory . . . 108

© 2015—The Toro® Company
8111 Lyndale Avenue South
Bloomington, MN 55420

Contact us at www.Toro.com.
Printed in the USA.
All Rights Reserved

Contents (continued)

FLX55 Ribless Body Conversion w/ Dual Trajectory . . . 110
FLX55 Series Golf Sprinkler w/ Dual Trajectory . . . 112
FLX55RB R Series Conversion w/ Dual Trajectory . . . 114
FLX55-6 Ribless Body Conv w/ 24-Pos TruJectory . . . 116
FLX55-6 Series Golf Sprinkler w/ 24-Pos TruJectory . . . 118
FLX55-6RB R Series Conv w/ 24-Pos TruJectory . . . 120
INF54 Series Golf Sprinkler w/ Dual Trajectory . . . 122
INF55 Series Golf Sprinkler w/ Dual Trajectory . . . 124
INF55-6 Series Golf Sprinkler w/ 24-Pos TruJectory . . . 126
INF34 Series Golf Sprinkler w/ Dual Trajectory . . . 128
INF35 Series Golf Sprinkler w/ Dual Trajectory . . . 130
INF35-6 Series Golf Sprinkler w/ 24-Pos TruJectory . . . 132
INFINITY Series 1 Inch Golf Sprinkler Body . . . 134
INFINITY Series 1.5 Inch Golf Sprinkler Body . . . 136
834S Series Sprinkler - Pre-August 2007 . . . 138
834S Series Sprinkler - August 2007-Present . . . 140
835S Series Sprinklers . . . 142
835B Series Sprinkler . . . 144
854S Series Sprinkler - Pre-2007 . . . 146
854S Series Sprinkler - August 2007 - Present . . . 148
855S Series Sprinkler . . . 150
855S Series Ribless Body, Conversion Assembly . . . 152
860S Series Sprinkler . . . 154
880S Series Sprinkler . . . 156
730 Series . . . 158
760 Series Golf Sprinkler . . . 160
650 Series . . . 162
750 Series Golf Sprinklers . . . 166
780 Series Golf Sprinklers . . . 168
780 Series Ribless Body Conversion Assembly . . . 170
670 Series Golf Sprinkler . . . 172
690 Series Golf Sprinkler . . . 174
Golf Sprinkler Body - 1 Inch . . . 178
Golf Sprinkler Body - 1 Inch - 800S and DT Series . . . 180
Golf Sprinkler Body - 1.5 Inch . . . 182
Golf Sprinkler Body - 1.5 Inch - 800S and DT Series . . . 184
Pilot Valve . . . 186
Pilot Valve, Adjustable Pressure . . . 188
TPV Series Valve, 1 Inch Female . . . 190
TPV Series Valve, 1 Inch Male . . . 192
EZ-Flo Plus Series, 1 Inch Male . . . 194
EZ-Flo Plus Series, 1 Inch Female . . . 196
EZ-Flo Plus Series, 1 Inch Angle . . . 198
EZ-Flo Plus AVB Series, 3/4 Inch and 1 Inch . . . 200
264 Series, 3/4 Inch Valves . . . 202
264 Series, 1 Inch Valve . . . 204
254 Series, 1 Inch Valves . . . 206
250 Series, 1 Inch Valve . . . 208
260 Series, 1 Inch Valve . . . 210
252 Series, 1 Inch Valves . . . 212
252 Series, 1.5 Inch (Sheet 1 of 2) . . . 214
252 Series, 1.5 Inch Valve (Sheet 2 of 2) . . . 216
252 Series, 2 Inch Valve (Sheet 1 of 2) . . . 218
252 Series, 2 Inch Valve (Sheet 2 of 2) . . . 220

Contents (continued)

P-220 and P-220G Series, 1 Inch Valve . . . 222
P-220 and P-220G Series, 1.5 Inch Valve . . . 224
P-220, P-220G and Scrubber Series - 2 Inch Valve . . . 226
P-220, P-220G and Scrubber Series - 3 Inch . . . 228
220, 220G Series, 1 In Valves, Pressure Reg. . . . 230
220, 220G Series, 1.25 and 1.5 In, Pressure Reg. . . . 232
220, 220G Series, 2 Inch, Pressure Reg. . . . 234
220 Series, 2.5 and 3 Inch . . . 236
2-Way Pilot Valve . . . 238
Manual Valve Actuator . . . 239
3-Way Actuator . . . 240
3-Way Actuator, (NC) . . . 241
Electric-Hydraulic Converter Module Assembly . . . 242
Flow Gauge, 995-01 . . . 243
EVOLUTION Controller . . . 244
TIS-612 - Indoor Controller . . . 246
TIS-612 - Outdoor Controller . . . 248
TIS-240 - Outdoor Controller . . . 250
TIS-360/480 Outdoor Controller, Metal Cabinet . . . 252
TMC-424E - 4 through 24 Stations, Modular . . . 254
TMC-212 - Indoor Controller . . . 256
TMC-212 Outdoor and Outdoor High Surge Cntrlr . . . 258
GreenKeeper 212 - Indoor Controller . . . 260
GreenKeeper 212 - Outdoor Controller . . . 262
TDC 2-Wire Decoder System . . . 264
TDC 2-Wire Decoder System, Post Aug-2012 . . . 266
Sentinel Central Control System . . . 268
Sentinel Satellite - Wall Mount . . . 270
Sentinel Satellite - Pedestal Mount . . . 272
Sentinel Map To Assy - Sm Metal Wall Mt . . . 274
Sentinel Map To Assy - Plastic Pedestal Cabinet . . . 276
Sentinel Remote Transceiver . . . 278
Custom Command 9 through 24 Station - Plastic . . . 280
Custom Command 12-24 Station - Metal Cabinet . . . 282
Custom Command 36 and 48 Stn - Metal Cabinet . . . 284
Custom Command 48 Station . . . 286
SitePro Field Interface Unit (FIU) . . . 288
TouchNet For OSMAC . . . 290
Touch Net For Network LTC Plus Satellite . . . 292
GDC - Stand-Alone, PC Models, 2-Wire Decoder Sys . . . 294
Network VP and VPE - Plastic Cabinet . . . 296
Network VP and VPe - 2013 and Later . . . 298
Network VP and VPE - Internal Components . . . 300
Network VP and VPE - Power Supply . . . 302
Network 8000 Sat., Plastic Cabinet, Int. Components . . . 304
Network 8000 Sat., Plastic Cabinet, 24V Output . . . 306
Network 8000 Sat., Plastic Cabinet, AC/DC PS . . . 308
Network 8000 Sat., Plastic Cabinet, Power Supply . . . 310
Network 8000 Sat., Small, Green Stainless Pedestal . . . 312
Network 8000 Sat., Lrg. Stainless Pedestal (1 of 2) . . . 316
Network 8000 Sat., Lrg. Stainless Pedestal (2 of 2) . . . 318
Network 8000 Satellite Control Panel Assembly . . . 320
Network DR2 Satellite (Early Model) . . . 322
Network DR2 Satellite - Plastic Cabinet . . . 324

Contents (continued)

Network DR2 Satellite - Metal Cabinet (Late Model) . . . 326
Network LTC 1.0 Satellite - Wall Mount Cabinet . . . 328
Network LTC Satellite 1.0 - Taper-top Cabinet . . . 330
Network LTC Satellite 2.0 - Metal Cabinet (1 of 3) . . . 332
Network LTC Sat. 2.0, Network DR2 PS Assy (3 of 3) . . . 334
Network LTC Satellite 2.0 - Plastic Cabinet (2 of 3) . . . 336
Network LTC Plus Sat. - Internal Components . . . 338
Network LTC Plus Satellite 4.0, Metal Cabinet . . . 342
N. LTC Plus, Power Supply, Early Model . . . 344
Power Supply, N. LTC Plus and E-Series OSMAC . . . 346
Network LTC Plus Radio Assembly . . . 348
E-Series OSMAC Sat., Narrow, Plastic Cab. (1 Of 3) . . . 350
E-Series OSMAC Sat., Narrow, Metal Cab. (2 of 3) . . . 352
E-Series OSMAC Sat., Narrow (3 Of 3) . . . 354
E-Series OSMAC Sat., Wide, Plastic Cab. (1 of 3) . . . 356
E-Series OSMAC Sat., Wide Metal Cab. (2 of 3) . . . 358
E-Series OSMAC Sat., Wide (3 of 3) . . . 360
Power Supply, N. LTC Plus and E-Series OSMAC . . . 362
OSMAC Satellite - 8 x 13 Metal Ped., Electric . . . 364
OSMAC Satellite - 8 x 13 Metal Ped., Hydraulic . . . 366
OSMAC Satellite - 13 x 13 Metal Ped, Electric . . . 368
OSMAC Satellite - 13 x 13 Metal Ped, Hydraulic . . . 370
OSMAC Satellite - Plastic Pedestal, Electric . . . 372
OSMAC Satellite - Plastic Pedestal, Hydraulic . . . 374
OSMAC RDR - Model RDR0160LVNO . . . 376
OSMAC RDR - Model RDR0160LVCE . . . 377
OSMAC RDR Unit - Power Supply Assembly . . . 378
Plastic Satellite Pedestal 2006 And Earlier Models . . . 380
Plastic Satellite Pedestal 2007-2010 Models . . . 382
Plastic Satellite Pedestal 2011 and Later . . . 384

S2001 (continued)

Ref.	Part Number	Qty.	Description
1	89-3883	1	Cap, Rubber
2	102-0058	1	Seal, Debris
3	89-3885	1	Snap Ring
4	363-1493	2	Screw, #10 X 1.0" Phpnh, 2 Hlxa ▲
5	360-0530	2	O-Ring, 0.070" X 0.145" X 0.285" ▲
6	89-3944	1	Nozzle Top Assy., Pc
6	89-7295	1	Nozzle Top Assy., Fc
6	89-6734	1	Nozzle Top Assy., Pc, Effluent
6	89-7296	1	Nozzle Top Assy., Fc, Effluent
7	89-4887	1	Nozzle Base Retainer
8	363-3690	1	O-Ring
9		1	O-Ring Retainer (See Service Item 89-9914) ◆
10	89-9399	1	Spring ▲
11	89-3869	1	Shaft (Pc Only) ▲
12	89-4890	1	Arm, Clutch (Pc Only) ▲
13	89-5887	1	Spring, Clutch (Pc Only) ▲
14	89-3928	1	Nut, Nozzle Base
15	89-9870	1	Base, Nozzle
16	89-4769	1	Nozzle, Main ▲
17	89-8660	1	Nozzle, Lower ▲
18	363-4096	1	O-Ring, #121, 0.103" X 1.049" X 1.255" (Yellow) ▲
19	89-9427	1	Riser Assy.
20	89-5904	1	Brake
21	89-8036	1	Gear Drive Assy., 2001
22	89-7374	1	Holder, Stator
23		1	Stator (See Service Item 89-8202) ◆
24	89-3929	1	Screen
25	35-2245	1	Check Valve ▲
26	89-7393	1	Body Assy., Left Arc I.D. - Post 5/94 ▲
	89-8202		Stator Assy., 2001 (Includes Item 21 & 22) ● ■
	102-0365		Tree, Nozzle, Colored ● ■
	89-4717		Adjustment Tool ● ■
	995-83		Multi-Purpose Tool ● ■

● SERVICE ITEMS
▲ No longer available
■ Not illustrated
◆ Not serviced separately

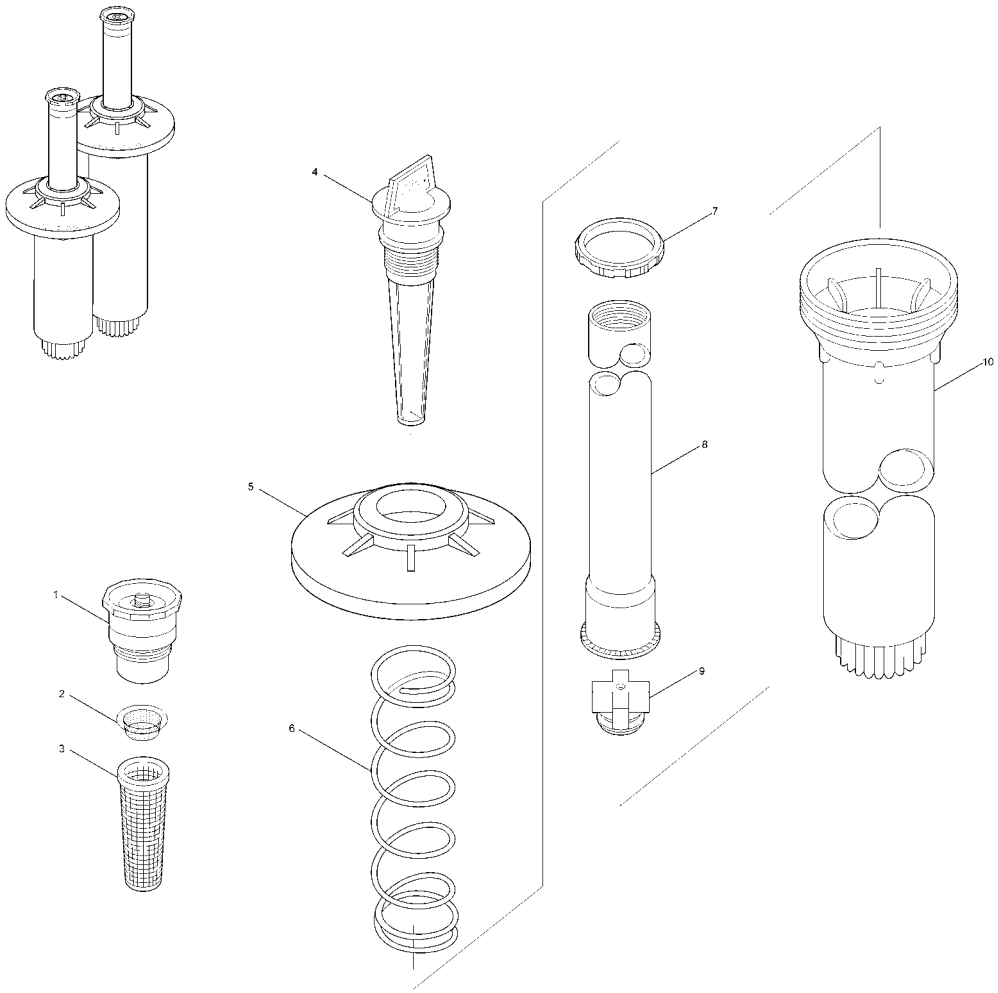

590GF-4 and 590GF-6

Ref.	Part Number	Qty.	Description
1		1	Nozzle ■●
2	89-5548	1	Screen, Filter, Sst
3	9-5112	1	Screen, Riser, White, Plastic, Regular Mesh
3	89-8738	1	Screen, Riser, Red, Plastic, Fine Mesh
4	102-0621	1	Flush Plug, Prx & Xf
5	102-7425	1	Cap, Black
5	102-7946	1	Cap, Lavender
6	35-9632	1	Spring, 4", Com
6	35-9633	1	Spring, 6", Com
7	118-1133	1	Ring, Ratchet
8	89-0969	1	Riser, 4"
8	89-0856	1	Riser, 6"
9	118-0590	1	Check Valve
10	118-0611	1	Body, 4"
10	118-0788	1	Body, 6"

● Not serviced separately

■ See 570 Nozzles Section.

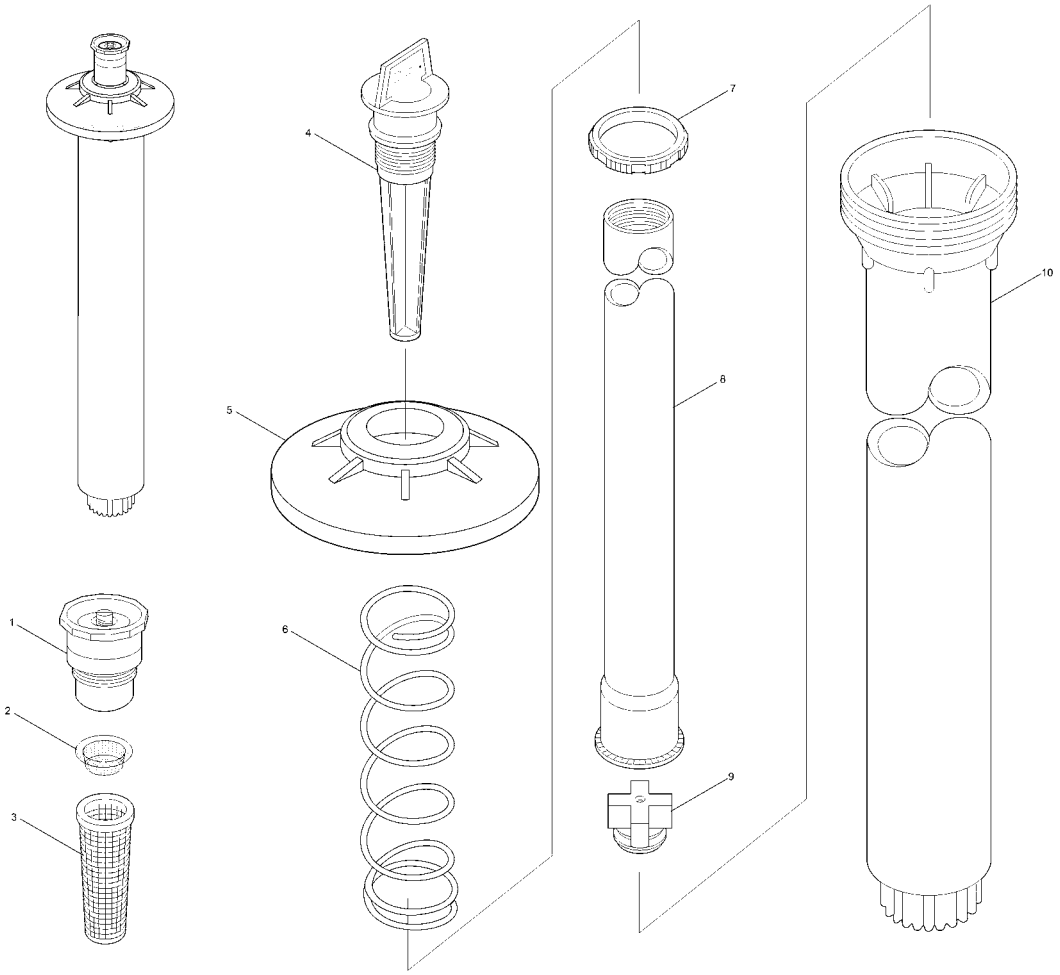

590GF-12

Ref.	Part Number	Qty.	Description
1		1	Nozzle ■●
2	89-5548	1	Screen, Filter, Sst
3	9-5112	1	Screen, Riser, White, Plastic, Regular Mesh
3	89-8738	1	Screen, Riser, Red, Plastic, Fine Mesh
4	102-0621	1	Flush Plug, Prx & Xf
5	102-7425	1	Cap, Black
5	102-7946	1	Cap, Lavender
6	35-9634	1	Spring, 12", Com
7	89-0855	1	Ring, Ratchet
8	102-1246	1	Riser, 12"
9	118-0590	1	Check Valve
10	9-7236	1	Body, 12"

● Not serviced separately

■ See 570 Nozzles Section.

720 Series Sprinkler

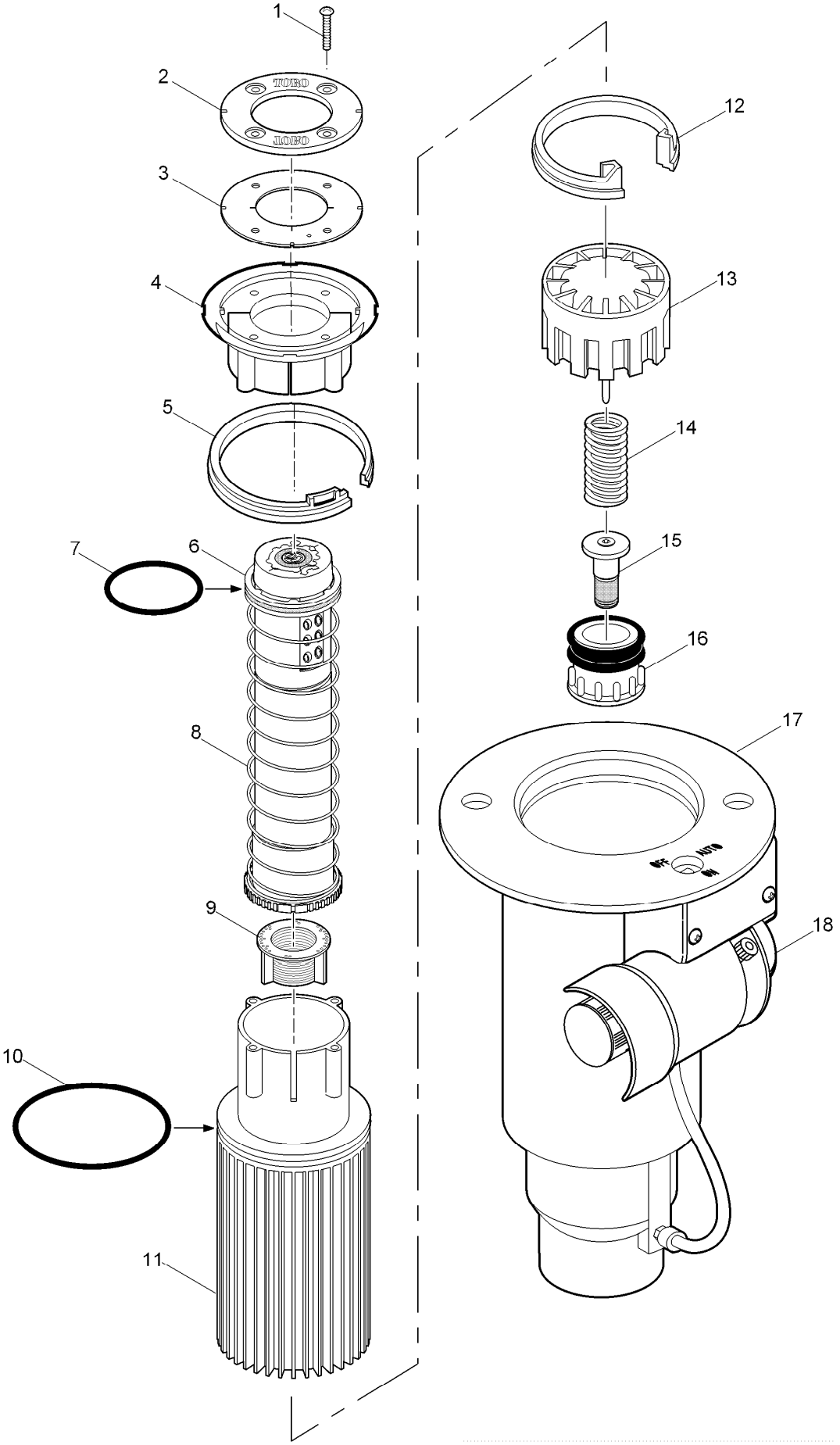

720 Series Sprinkler (continued)

Ref.	Part Number	Qty.	Description
1	363-3864	4	Screw, #8-32 X 1"
2	102-0257	1	Retainer, Debris Seal
2	102-0258	1	Retainer, Debris Seal, Effluent
3	102-5385	1	Seal, Debris
4	89-9446	1	Support, Riser, Ribbed Body
5	89-1385	1	Snap Ring, Riser
6	102-0255	1	Retainer, O-Ring, 720
7	363-3991	1	O-Ring, 0.070" X 1.864" X 2.004", Buna
8	89-9725	1	Riser Assembly, Pc (Inlcudes Items 6-9)
8	89-9726	1	Riser Assembly, Fc (Inlcudes Items 6-9)
9	89-9428	1	Screen
10	363-4102	1	O-Ring, Paraffin As-568 232
11	89-9443	1	Sleeve, Riser
12	89-4702	1	Snap Ring, Valve
13	9-1487	1	Cylinder Assy., El & Nc
14	3-2633	1	Spring, Valve, No, El & Nc
15	102-0081	1	Piston Assy., El, Low Flow (Includes Item 16)
16	35-9646	1	Filter Assy., Metering, El, Nc
17		1	Body Assy. (See Golf Sprinkler Body Assembly.) ❑ ▲
18		1	Pilot Valve Assy. (See Pilot Valve Assembly.) ◆▲
	995-15		Selector Tool (Flag Key) ●■
	995-100		Valve Snap Ring Pliers With Screen Remover ●■
	995-08		Valve Removal Tool ●■
	995-76		Valve Insertion Tool ●■
	995-83		Multi-Purpose Tool ●■
	89-7350		Adjustment Key ●■

● SERVICE TOOLS
▲ Not serviced separately
❑ See Golf Sprinkler Body Assembly Section.
■ Not illustrated
◆ See Pilot Valve Assembly Section.

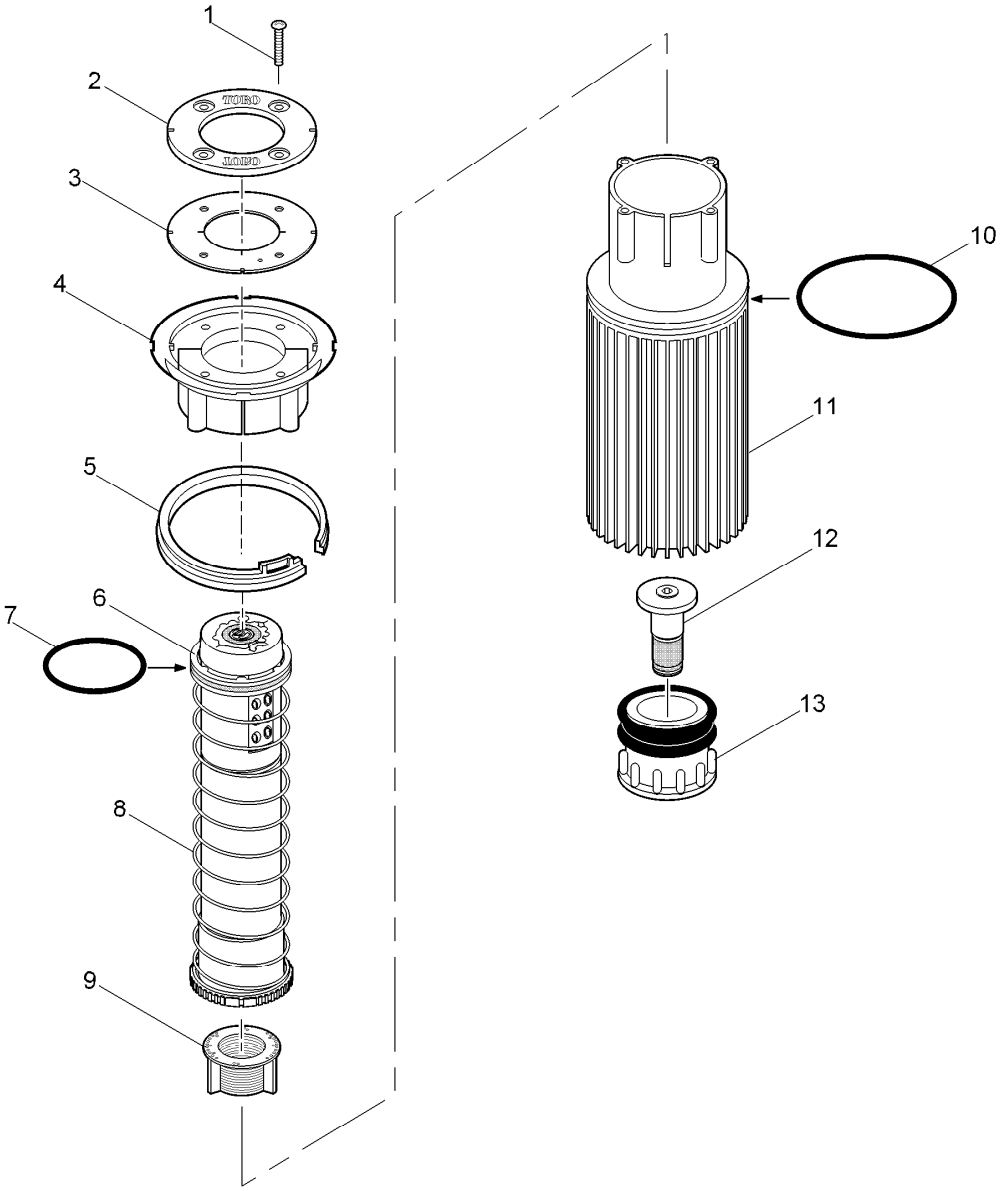

720 Series Conversion Assembly

Ref.	Part Number	Qty.	Description
1	363-3864	4	Screw, #8-32 X 1"
2	102-0257	1	Retainer, Debris Seal
2	102-0258	1	Retainer, Debris Seal, Effluent
3	102-5385	1	Seal, Debris
4	89-9446	1	Support, Riser, Ribbed Body
5	89-1385	1	Snap Ring, Riser
6	102-0255	1	Retainer, O-Ring, 720
7	363-3991	1	O-Ring, 0.070" X 1.864" X 2.004", Buna
8	89-9725	1	Riser Assembly, Pc (Includes Items 6-9)
8	89-9726	1	Riser Assembly, Fc (Includes Items 6-9)
9	89-9428	1	Screen
10	363-4102	1	O-Ring, Paraffin As-568 232
11	89-9443	1	Sleeve, Riser
12	35-9646	1	Filter Assy., Metering, El, Nc
13	102-0081	1	Piston Assy., El, Low Flow (Includes Item 12)

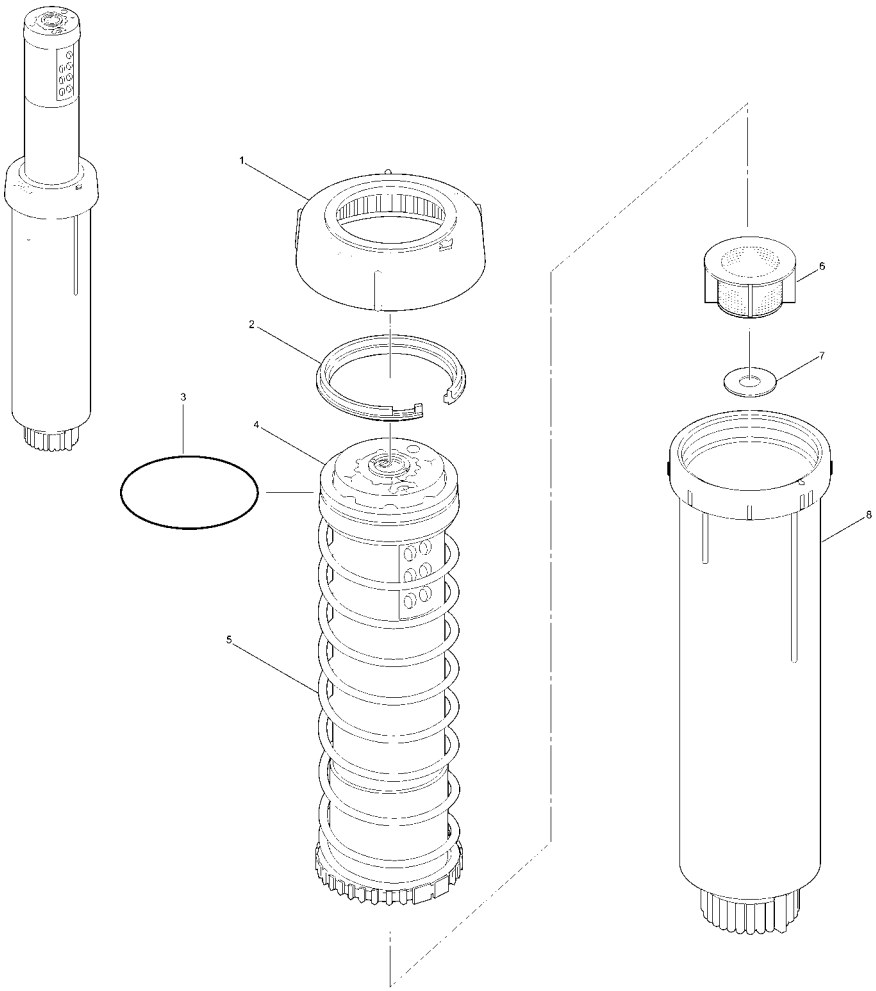

720G Series

Ref.	Part Number	Qty.	Description
1	102-2277	1	Cover, Rubber Body
1	102-2278	1	Cover, Rubber Body, Effluent
2	89-8657	1	Snap Ring
3	363-4195	1	O-Ring, 0.070" X 1.864" X 2.004" Buna
4		1	Retainer W/Seal (See Service Item 102-2247) ◆
5	725G	1	Riser Assembly (Adjustable Part Circle) ❑
5	724G	1	Riser Assembly (Full-Circle) ❑
5	725GE	1	Riser Assembly (Adjustable Part-Circle, Effluent) ❑
5	724GE	1	Riser Assembly (Full-Circle, Effluent) ❑
6	89-9428	1	Screen
7	89-7561	1	Seal, Check, Com
8	89-8658	1	Body
	102-2247		Retainer W/ O-Ring (Includes Items 3 & 4) ● ▲
	995-83		Multi-Purpose Tool ■ ▲
	89-7350		Adjustment Key ■ ▲

● SERVICE ITEMS
▲ Not illustrated
❑ Order Through Finished Goods Distribution System - Minneapolis
■ SERVICE TOOLS
◆ Not serviced separately

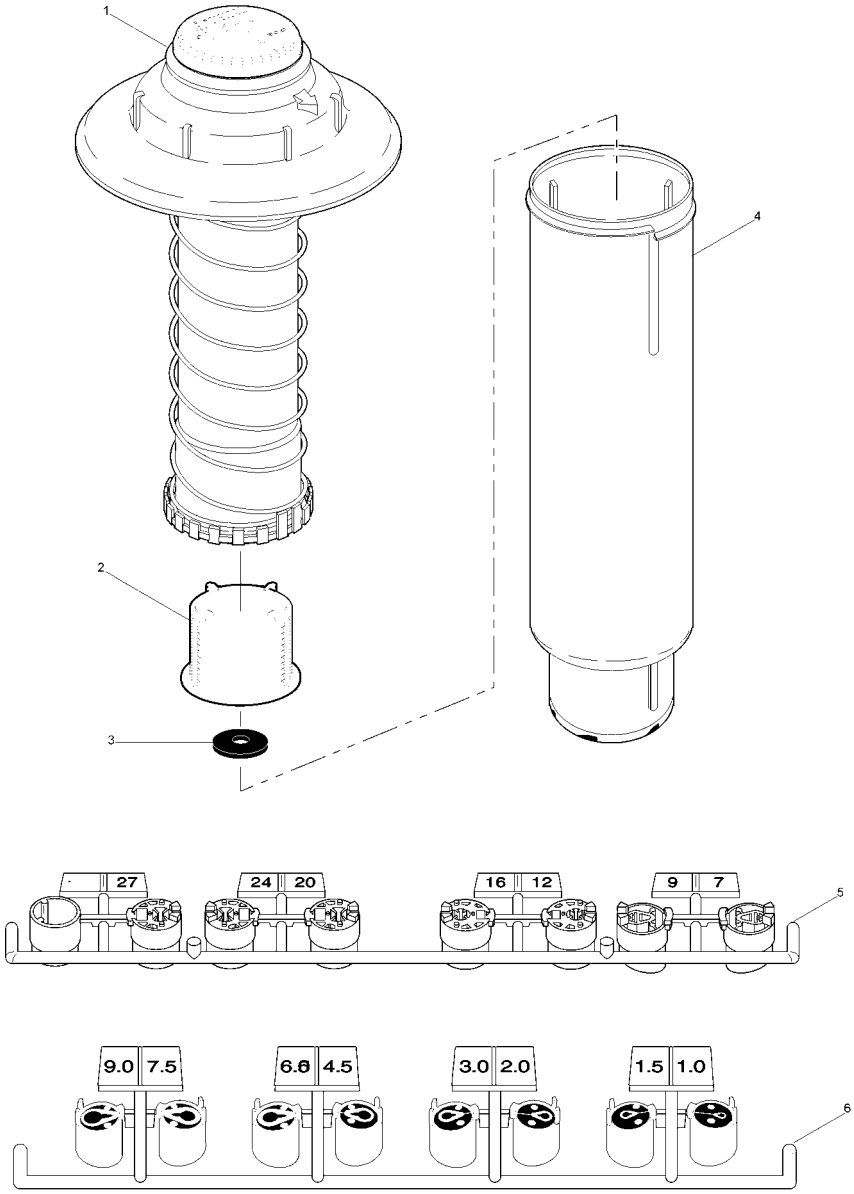

810G and 810GL

Ref.	Part Number	Qty.	Description
1		1	Cap And Riser Assy. (Order Complete Sprinkler) ▲◆
2	89-9182	1	Screen
3	89-9183	1	Seal, Check
4	102-3039	1	Body Assy., Npt Threads
4	102-3040	1	Body Assy., Bsp Threads
4	102-3041	1	Body Assy., Acme Threads
5	102-2633	1	Tree, Nozzle, T7, Stamped, High Flow
6	102-1877	1	Tree, Nozzle, T7, Low Flow
	102-6527	1	Adjustment Tool ●■

● SERVICE TOOLS
▲ Not serviced separately
◆ Order Through Finished Goods Distribution System - Minneapolis
■ Not illustrated

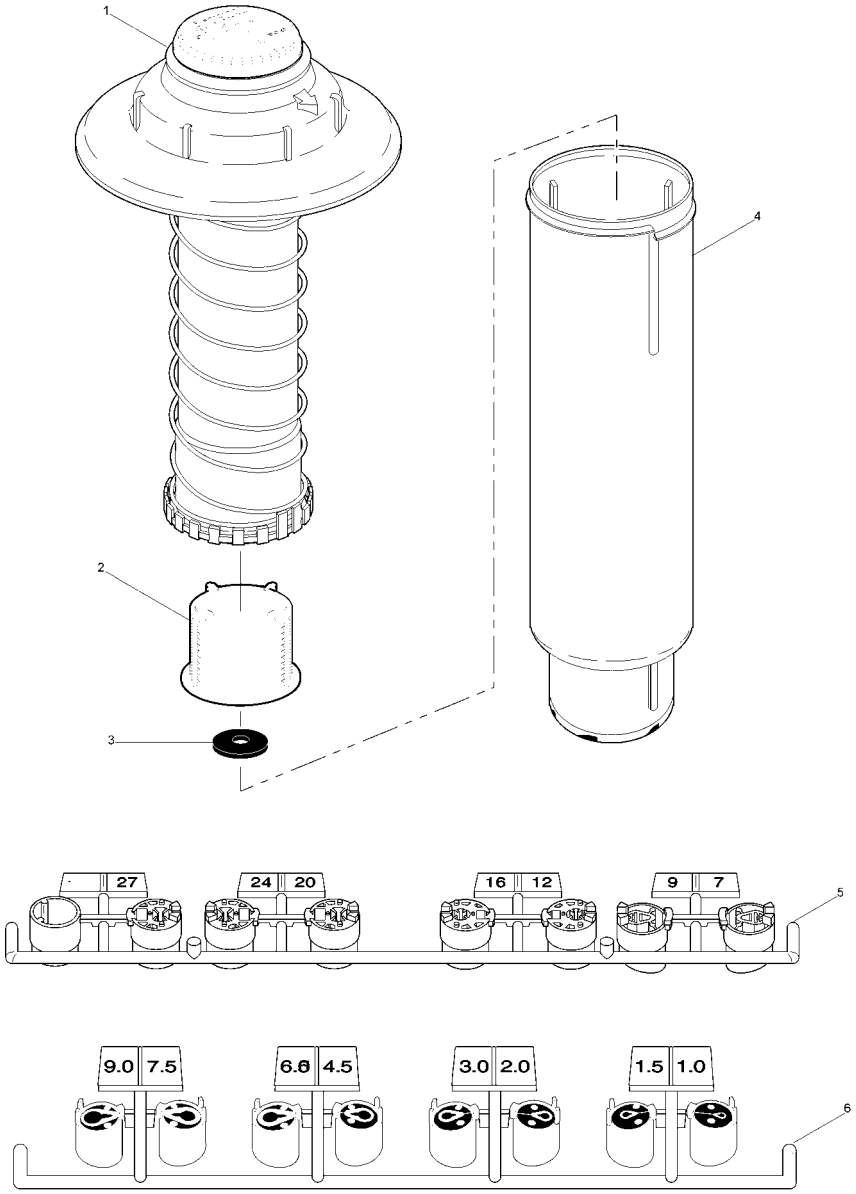

810G and 810GL (continued)

● SERVICE TOOLS
▲ Not serviced separately
◆ Order Through Finished Goods Distribution System - Minneapolis

■ Not illustrated

DT34 Series Sprinkler

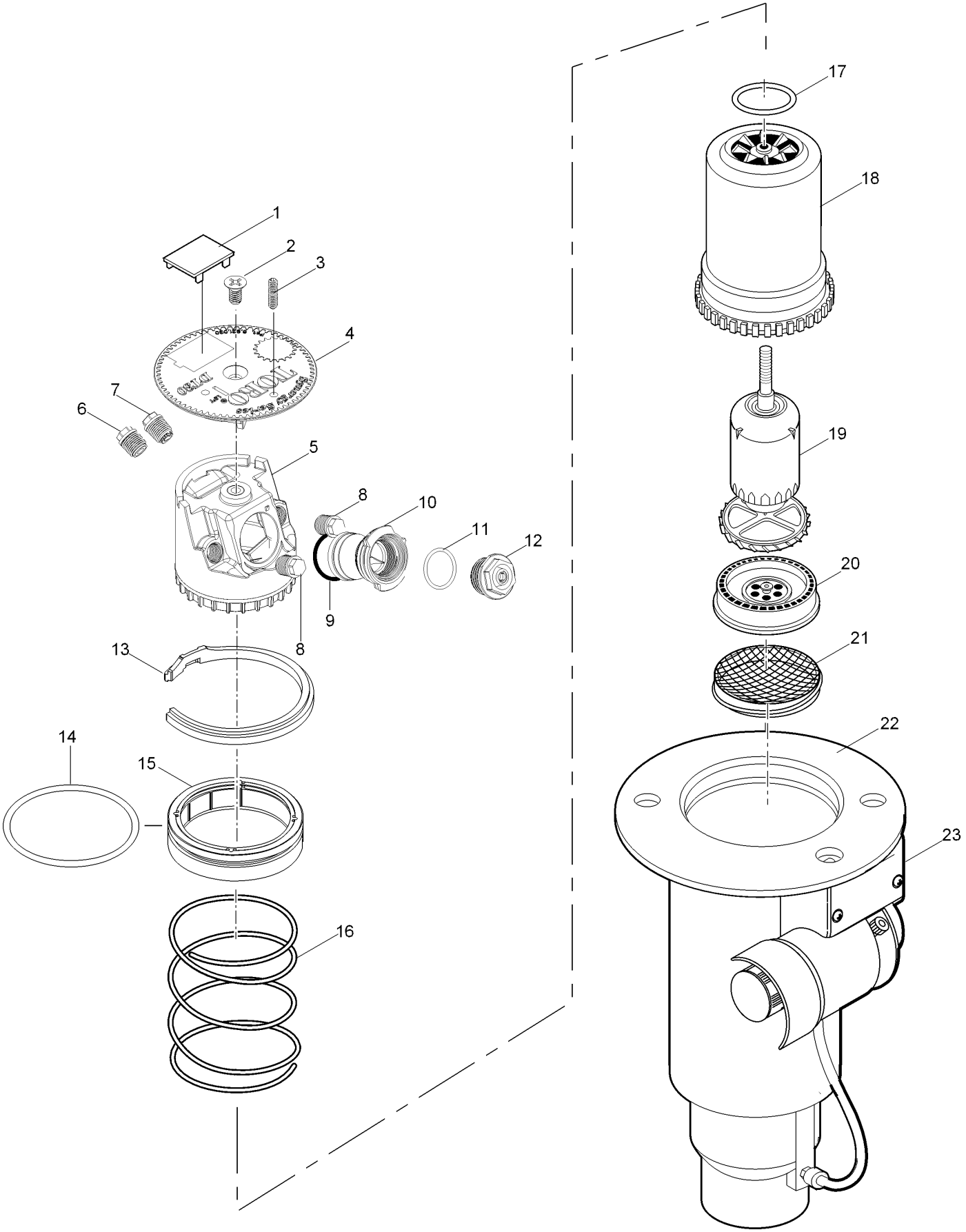

DT34 Series Sprinkler (continued)

Ref.	Part Number	Qty.	Description
1	89-1589	1	Plug, Cap (Black)
2	102-0362	1	Screw, Cap
3	363-4839	1	Radius Reduction Screw
4	102-4752	1	Cap, Dt Series
4	102-5588	1	Cap, Dt Series, Effluent
5	102-5837	1	Nozzle Base Assembly
6	102-2925	1	Intermediate Nozzle, Blue (Used W/ #1 Main)
6	102-2926	1	Intermediate Nozzle, Orange (Used W/ #2 Main)
6	102-2928	1	Intermediate Nozzle, Red (Used W/ #3 Main)
6	102-2929	1	Intermediate Nozzle, Beige (Used W/ #4 & 5 Mains)
6	102-6944	1	Intermediate Nozzle Assy., Red W/ Stream Straightener (Used W/ #6 Main)
6	102-6945	1	Intermediate Nozzle Assy., Gray W/ Stream Straightener (Used W/ #7 Main)
6	102-6883	1	Intermediate Nozzle, Brown (Used W/ #7 Main, Front Position On The Right Of Main)
7	102-6937	1	Nozzle Assy. Inner, Yellow Nozzle W/ Yellow Helical Restrictor
8	102-4335	2	Plug, Nozzle
9	102-5978	1	O-Ring, Nozzle Housing
10	102-5597	1	Nozzle Housing Assy. (Includes Item 9)
11	363-4978	1	O-Ring, Main Nozzle
12	102-0725	1	Nozzle, Main, #31, Yellow
12	102-7001	1	Nozzle, Main, #32, Blue
12	102-0727	1	Nozzle, Main, #33, Brown
12	102-7002	1	Nozzle, Main, #34, Orange
12	102-6908	1	Nozzle, Main, #35, Green
12	102-0730	1	Nozzle, Main, #36, Gray
12	102-4261	1	Nozzle, Main, #37, Black
13	89-1385	1	Snap Ring, Riser
14	363-4102	1	O-Ring, Paraffin As-568 232
15	102-0134	1	Retainer, Seal
16	102-0151	1	Spring, Return
17	363-4167	1	O-Ring, Nozzle Base
18	102-0202	1	Riser
19	102-4503	1	Drive Assembly, 12-Pack
20	102-6929	1	Stator, Low Flow, High Velocity, Blue (Used W/ #1-4 Main Nozzles)
20	102-1940	1	Stator Assembly, Medium Flow, White (Used W/ #5-7 Main Nozzles)
21	102-1715	1	Screen, Riser
22		1	Body Assembly (See Golf Sprinkler Body Assembly) ◆
23		1	Pilot Valve Assembly (See Pilot Valve) ◆
	102-2208		Nozzle, Main, #30, Blank, White ● ▲
	118-1491	1	Adapter, Main Nozzle ● ▲
	102-5672		Cap, Blank ● ▲
	102-5673		Cap, Blank, Effluent ● ▲
	YARDMARKYEL10		Yardage Marker, Yellow (10-Sheets Per Pack) ● ▲
	YARDMARKLAV10		Yardage Marker, Lavender (For Non-Potable Water Applications) ● ▲
	DT34-3134		Conversion, Full Circle, W/ #31, #32, #33 & #34 Nozzles ● ▲ ❑
	DT34-3134E		Conversion, Full Circle, W/ #31, #32, #33 & #34 Nozzles And Effluent Cap ● ▲ ❑
	DT34-3537		Conversion, Full Circle, W/ #35, #36 & #37 Nozzles ● ▲ ❑
	DT34-3537E		Conversion, Full Circle, W/ #35, #36 & #37 Nozzles And Effluent Cap ● ▲ ❑
	995-08		Valve Removal Tool ■ ▲
	995-76		Valve Insertion Tool ■ ▲
	995-15		Selector Tool (Flag Key) ■ ▲
	995-99		Nut Driver, 5/8" (For Main Nozzle) ■ ▲
	995-105		Nut Driver, 5/16" (For Inner & Intermediate Nozzles And Plugs) ■ ▲
	995-83		Multi-Purpose Tool ■ ▲
	995-85		Riser Removal Tool ■ ▲
	995-100		Valve Snap Ring Pliers With Screen Remover ■ ▲
	995-102	1	Riser Hold-Up Tool, Universal ■ ▲
	118-0954	1	Riser Hold-Up Tool, Red ● ▲

● SERVICE ITEMS
▲ Not illustrated
❑ Order Through Finished Goods Distribution System - Minneapolis
■ SERVICE TOOLS
◆ Not serviced separately

DT34B Series Sprinkler

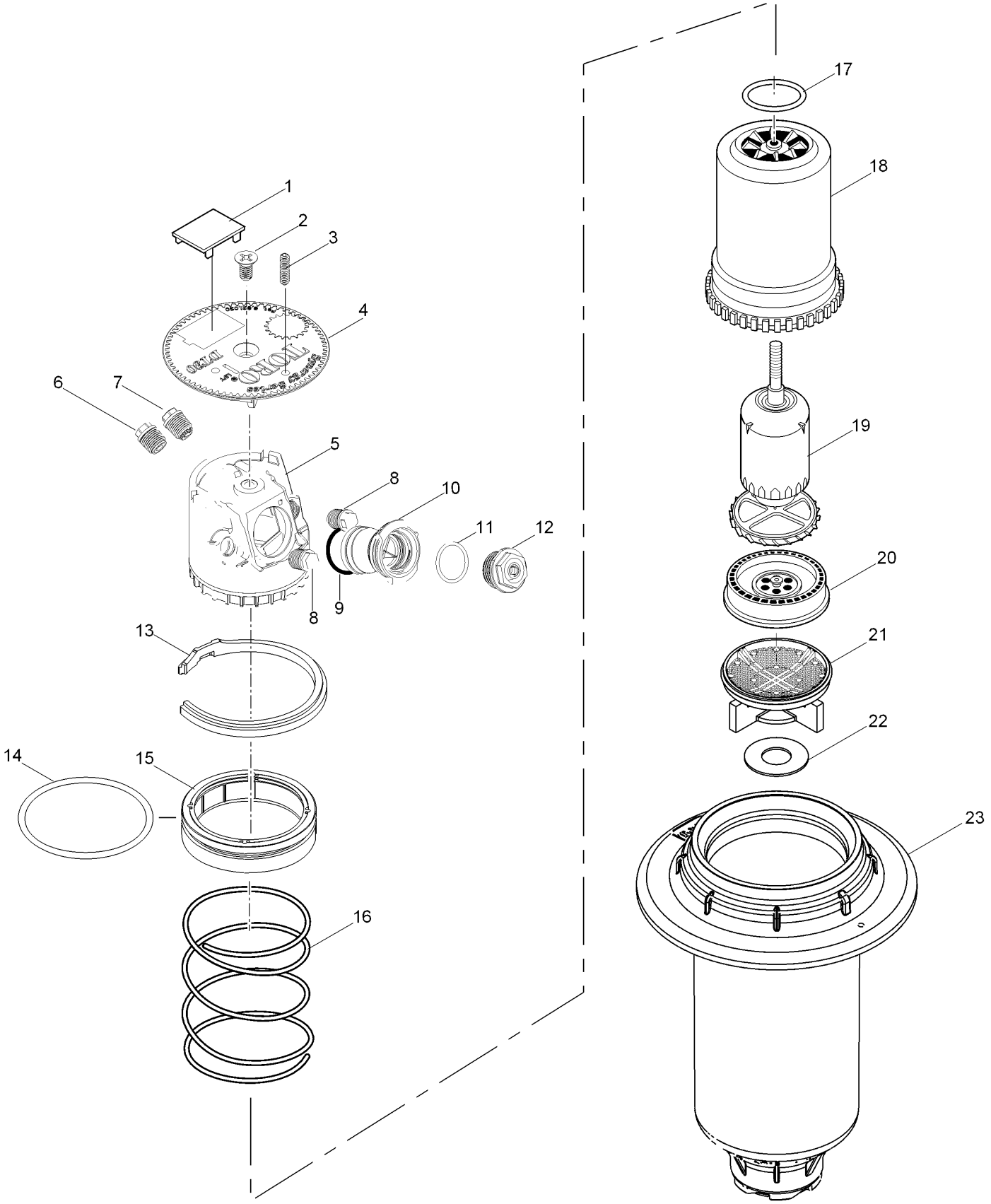

DT34B Series Sprinkler (continued)

Ref.	Part Number	Qty.	Description
1	89-1589	1	Plug, Cap (Black)
2	102-0362	1	Screw, Cap
3	363-4839	1	Radius Reduction Screw
4	102-4752	1	Cap, Dt Series
4	102-5588	1	Cap, Dt Series, Effluent
5	102-5837	1	Nozzle Base Assembly
6	102-2925	1	Intermediate Nozzle, Blue (Used W/ #1 Main)
6	102-2926	1	Intermediate Nozzle, Orange (Used W/ #2 Main)
6	102-2928	1	Intermediate Nozzle, Red (Used W/ #3 Main)
6	102-2929	1	Intermediate Nozzle, Beige (Used W/ #4 & 5 Mains)
6	102-6944	1	Intermediate Nozzle Assy., Red W/ Stream Straightener (Used W/ #6 Main)
6	102-6945	1	Intermediate Nozzle Assy., Gray W/ Stream Straightener (Used With #7 & 8 Mains)
6	102-6883	1	Intermediate Nozzle, Brown (Used W/ #7 & 8 Main, Front Position On The Right Of Main)
7	102-6937	1	Nozzle Assy. Inner, Yellow Nozzle W/ Yellow Helical Restrictor
8	102-4335	2	Plug, Nozzle
9	102-5978	1	O-Ring, Nozzle Housing
10	102-5597	1	Nozzle Housing Assy. (Includes Item 9)
11	363-4978	1	O-Ring, Main Nozzle
12	102-0725	1	Nozzle, Main, #31, Yellow
12	102-7001	1	Nozzle, Main, #32, Blue
12	102-0727	1	Nozzle, Main, #33, Brown
12	102-7002	1	Nozzle, Main, #34, Orange
12	102-6908	1	Nozzle, Main, #35, Green
12	102-0730	1	Nozzle, Main, #36, Gray
12	102-4261	1	Nozzle, Main, #37, Black
12	102-4260	1	Nozzle, Main, #58, Red
13	89-1385	1	Snap Ring, Riser
14	363-4102	1	O-Ring, Paraffin As-568 232
15	102-0134	1	Retainer, Seal
16	102-0151	1	Spring, Return
17	363-4167	1	O-Ring, Nozzle Base
18	102-0202	1	Riser
19	102-4503	1	Drive Assembly, 12-Pack
20	102-6929	1	Stator, Low Flow, High Velocity, Blue (Used W/ #1-4 Main Nozzles)
20	102-1940	1	Stator Assembly, Medium Flow, White (Used W/ #5-8 Main Nozzles)
21	102-5152	1	Screen, Riser, W/ Check Seal Holder
22	102-7437	1	Seal, Check
23	102-7419	1	Body, Npt
23	102-7420	1	Body, Bsp
23	102-7421	1	Body, Acme
	102-2208		Nozzle, Main, #30, Blank, White ●▲
	118-1491	1	Adapter, Main Nozzle ●▲
	102-5672		Cap, Blank ●▲
	102-5673		Cap, Blank, Effluent ●▲
	YARDMARKYEL10		Yardage Marker, Yellow (10-Sheets Per Pack) ●▲
	YARDMARKLAV10		Yardage Marker, Lavender (For Non-Potable Water Applications) ●▲
	995-99		Nut Driver, 5/8" (For Main Nozzle) ■▲
	995-105		Nut Driver, 5/16" (For Inner & Intermediate Nozzles And Plugs) ■▲
	995-83		Multi-Purpose Tool ■▲
	995-85		Riser Removal Tool ■▲
	995-102	1	Riser Hold-Up Tool, Universal ■▲
	118-0954	1	Riser Hold-Up Tool, Red ●▲

● SERVICE ITEMS
▲ Not illustrated

■ SERVICE TOOLS

DT35 Series Sprinkler

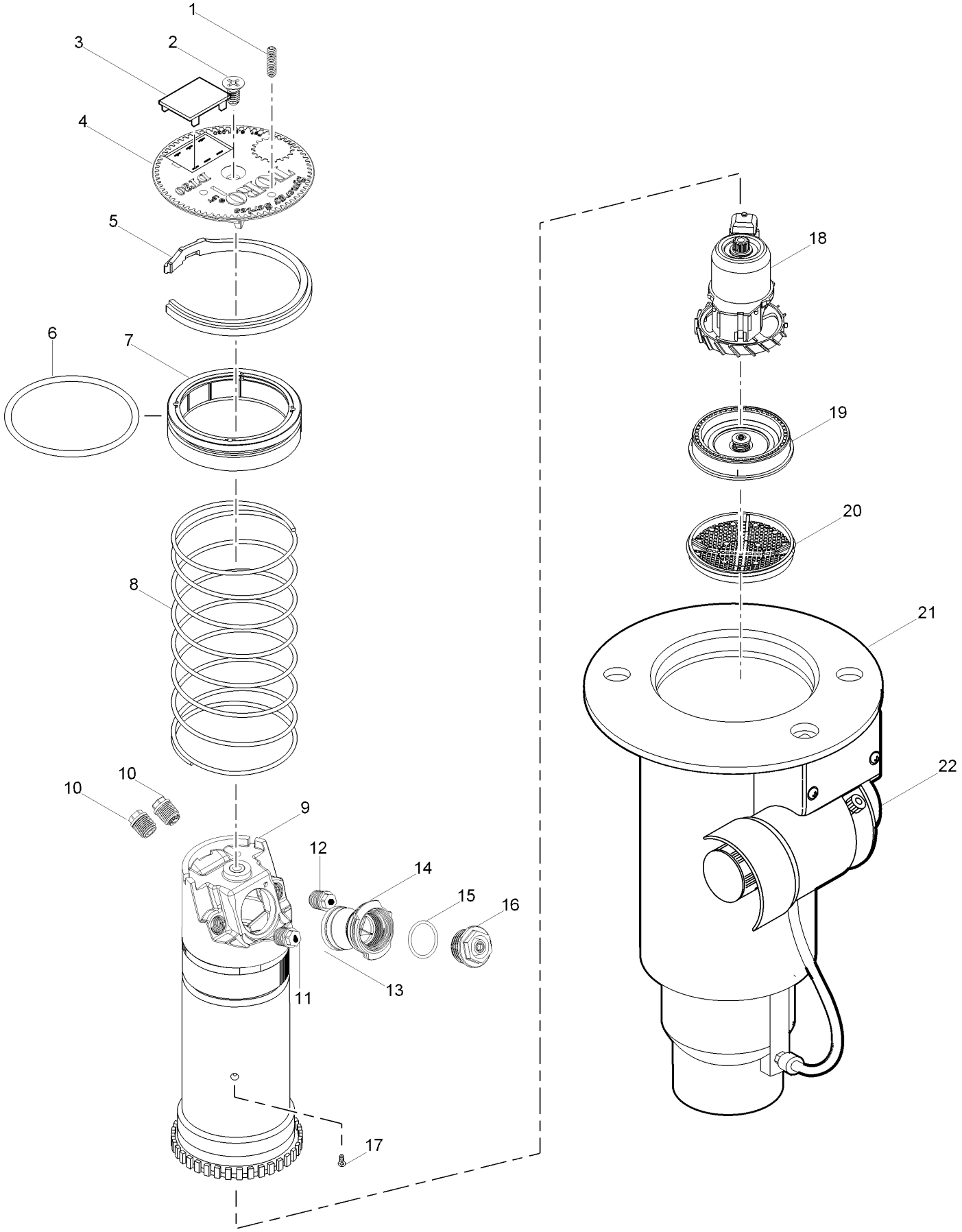

DT35 Series Sprinkler (continued)

Ref.	Part Number	Qty.	Description
1	363-4839	1	Radius Reduction Screw
2	102-6138	1	Screw, Cap, Black
3	89-1589	1	Plug, Cap (Black)
4	102-4752	1	Cap, Dt Series
4	102-5588	1	Cap, Dt Series, Effluent
5	89-1385	1	Snap Ring, Riser
6	363-4102	1	O-Ring, Paraffin As-568 232
7	102-0134	1	Retainer, Seal
8	102-0151	1	Spring, Return
9	102-5730	1	Riser Assembly
10	102-4335	2	Plug, Nozzle
11	102-5670	1	Nozzle Assy. Inner, Yellow W/ White Helical Restrictor (Used W/ #0-5 Mains)
11	102-6531	1	Nozzle Assy., Inner, Green W/ White Helical Restrictor (Used W/ #6-7 Mains)
12	102-6942	1	Intermediate Nozzle Assy., Beige W/ Stream Straightener (Used W/ #0 Main)
12	102-5671	1	Intermediate Nozzle Assy., Brown W/ Stream Straightener (Used W/ #1 Main)
12	102-6884	1	Intermediate Nozzle, Yellow (Used W/ #2-4 Mains)
12	102-6885	1	Intermediate Nozzle, Green (Used W/ #5-7 Mains)
13	102-5978	1	O-Ring, Nozzle Housing
14	102-5597	1	Nozzle Housing Assy. (Includes Item 13)
15	363-4978	1	O-Ring, Main Nozzle
16	102-2208	1	Nozzle, Main, #30, Blank, White
16	102-6906	1	Nozzle, Main, #31, Yellow
16	102-0726	1	Nozzle, Main, #32, Blue
16	102-6907	1	Nozzle, Main, #33, Brown
16	102-0728	1	Nozzle, Main, #34, Orange
16	102-6955	1	Nozzle, Main, #35, Green
16	102-6935	1	Nozzle, Main, #36, Gray
16	102-6936	1	Nozzle, Main, #37, Black
17	363-4236	1	Screw, Drive
18	102-4504	1	Drive Assy., 12-Pack
19	102-6929	1	Stator, Low Flow, High Velocity, Blue (Used W/ #0 Main)
19	102-1939	1	Stator Assembly, Low Flow, Yellow (Used W/ #1-4 Mains)
19	102-1940	1	Stator Assembly, Medium Flow, White (Used W/ #5-7 Mains)
20	102-1715	1	Screen, Riser
21		1	Body Assembly (See Separated Golf Body Assembly Section) ◆
22		1	Pilot Valve Assembly (See Separated Pilot Valve Assembly Section) ◆
	118-1491	1	Adapter, Main Nozzle ● ▲
	102-5672		Cap, Blank ● ▲
	102-5673		Cap, Blank, Effluent ● ▲
	YARDMARKYEL10		Yardage Marker, Yellow (10-Sheets Per Pack) ● ▲
	YARDMARKLAV10		Yardage Marker, Lavender (For Non-Potable Water Applications) ● ▲
	DT35-3134		Conversion, Part And Full Circle, W/ #31, #32, #33 & #34 Nozzles ● ❑ ▲
	DT35-3134E		Conversion, Part And Full Circle, W/ #31?#34 Nozzles And Effluent Cap ● ❑ ▲
	DT35-3537		Conversion, Part And Full Circle, W/ #35, #36 & #37 Nozzles ● ❑ ▲
	DT35-3537E		Conversion, Part And Full Circle, W/ #35?37 Nozzles And Effluent Cap ● ❑ ▲
	995-08		Valve Removal Tool ■ ▲
	995-76		Valve Insertion Tool ■ ▲
	995-15		Selector Tool (Flag Key) ■ ▲
	995-99		Nut Driver, 5/8" (For Main Nozzle) ■ ▲
	995-105		Nut Driver, 5/16" (For Inner & Intermediate Nozzles And Plugs) ■ ▲
	995-83		Multi-Purpose Tool ■ ▲
	995-85		Riser Removal Tool ■ ▲
	995-100		Valve Snap Ring Pliers With Screen Remover ■ ▲
	995-102	1	Riser Hold-Up Tool, Universal ■ ▲
	118-0954	1	Riser Hold-Up Tool, Red ● ▲

● SERVICE ITEMS
▲ Not illustrated
❑ Order Through Finished Goods Distribution System - Minneapolis
■ SERVICE TOOLS
◆ Not serviced separately

DT35B Series Sprinkler

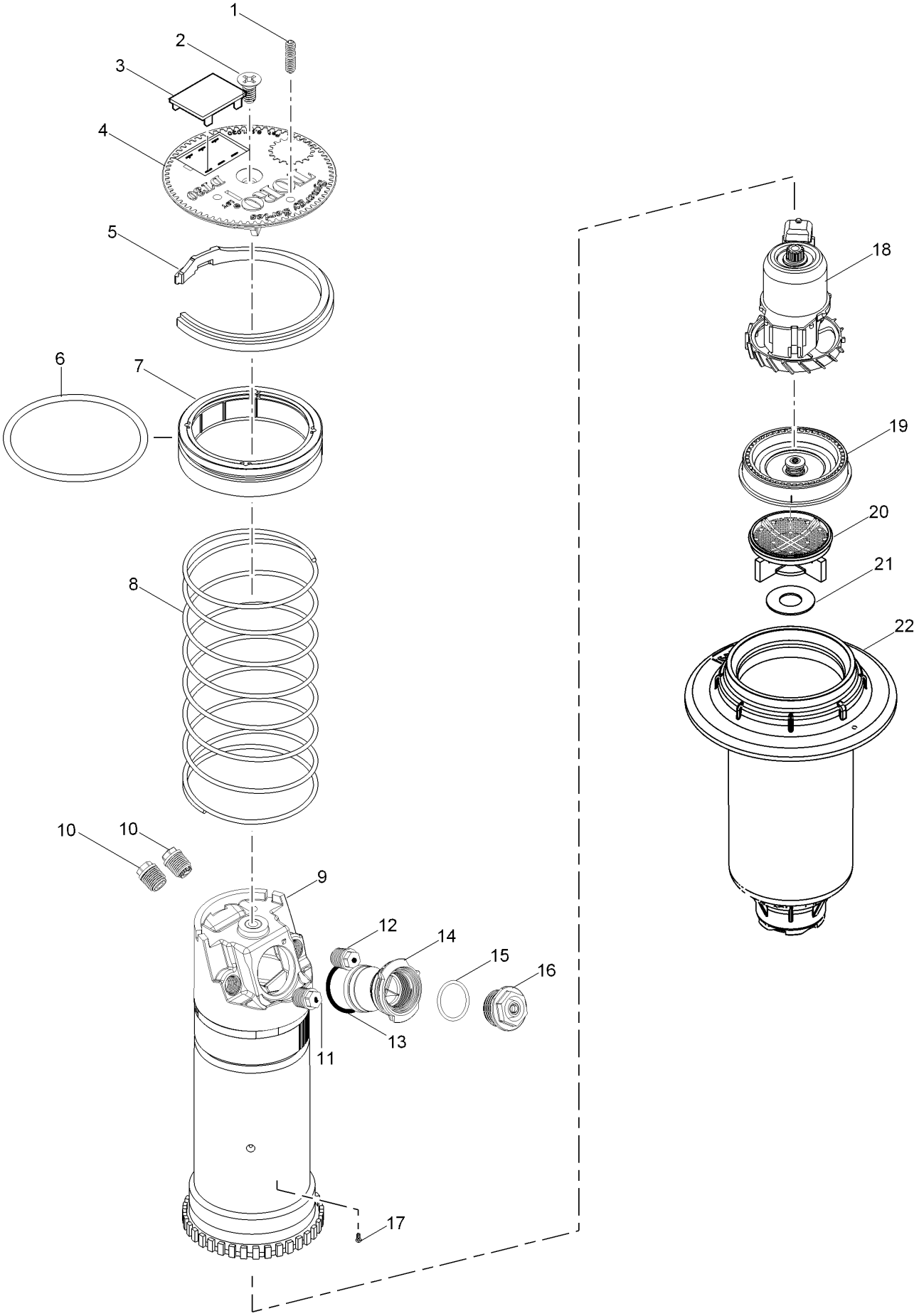

DT35B Series Sprinkler (continued)

Ref.	Part Number	Qty.	Description
1	363-4839	1	Radius Reduction Screw
2	102-6138	1	Screw, Cap, Black
3	89-1589	1	Plug, Cap (Black)
4	102-4752	1	Cap, Dt Series
4	102-5588	1	Cap, Dt Series, Effluent
5	89-1385	1	Snap Ring, Riser
6	363-4102	1	O-Ring, Paraffin As-568 232
7	102-0134	1	Retainer, Seal
8	102-0151	1	Spring, Return
9	102-5730	1	Riser Assembly
10	102-4335	2	Plug, Nozzle
11	102-5670	1	Nozzle Assy. Inner, Yellow W/ White Helical Restrictor (Used W/ #0-5 Mains)
11	102-6531	1	Nozzle Assy., Inner, Green W/ White Helical Restrictor (Used W/ #6-8 Mains)
12	102-6942	1	Intermediate Nozzle Assy., Beige W/ Stream Straightener (Used W/ #0 Main)
12	102-5671	1	Intermediate Nozzle Assy., Brown W/ Stream Straightener (Used W/ #1 Main)
12	102-6884	1	Intermediate Nozzle, Yellow (Used W/ #2-4 Mains)
12	102-6885	1	Intermediate Nozzle, Green (Used W/ #5-8 Mains)
13	102-5978	1	O-Ring, Nozzle Housing
14	102-5597	1	Nozzle Housing Assy. (Includes Item 3)
15	363-4978	1	O-Ring, Main Nozzle
16	102-2208	1	Nozzle, Main, #30, Blank, White
16	102-6906	1	Nozzle, Main, #31, Yellow
16	102-0726	1	Nozzle, Main, #32, Blue
16	102-6907	1	Nozzle, Main, #33, Brown
16	102-0728	1	Nozzle, Main, #34, Orange
16	102-6955	1	Nozzle, Main, #35, Green
16	102-6935	1	Nozzle, Main, #36, Gray
16	102-6936	1	Nozzle, Main, #37, Black
16	102-4260	1	Nozzle, Main, #58, Red
17	363-4236	1	Screw, Drive
18	102-4504	1	Drive Assy., 12-Pack
19	102-6929	1	Stator, Low Flow, High Velocity, Blue (Used W/ #0 Main Nozzle)
19	102-1939	1	Stator Assembly, Low Flow, Yellow (Used W/ #1-4 Main Nozzles)
19	102-1940	1	Stator Assembly, Medium Flow, White (Used W/ #5-8 Main Nozzles)
20	102-5152	1	Screen, Riser, W/ Check Seal Holder
21	102-7437	1	Seal, Check
22	102-7419	1	Body, Npt
22	102-7420	1	Body, Bsp
22	102-7421	1	Body, Acme
	118-1491	1	Adapter, Main Nozzle ■ ◆
	102-5672		Cap, Blank ■ ◆
	102-5673		Cap, Blank, Effluent ■ ◆
	YARDMARKYEL10		Yardage Marker, Yellow (10-Sheets Per Pack) ■ ◆
	YARDMARKLAV10		Yardage Marker, Lavender (For Non-Potable Water Applications) ■ ◆
	995-99		Nut Driver, 5/8" (For Main Nozzle) ▲ ◆
	995-105		Nut Driver, 5/16" (For Inner & Intermediate Nozzles And Plugs) ▲ ◆
	995-83		Multi-Purpose Tool ● ◆
	995-85		Riser Removal Tool ▲ ◆
	995-102	1	Riser Hold-Up Tool, Universal ▲ ◆
	118-0954	1	Riser Hold-Up Tool, Red ■ ◆

● Service Tool
▲ SERVICE TOOLS
■ SERVICE ITEMS
◆ Not illustrated

DT54 Series Sprinkler

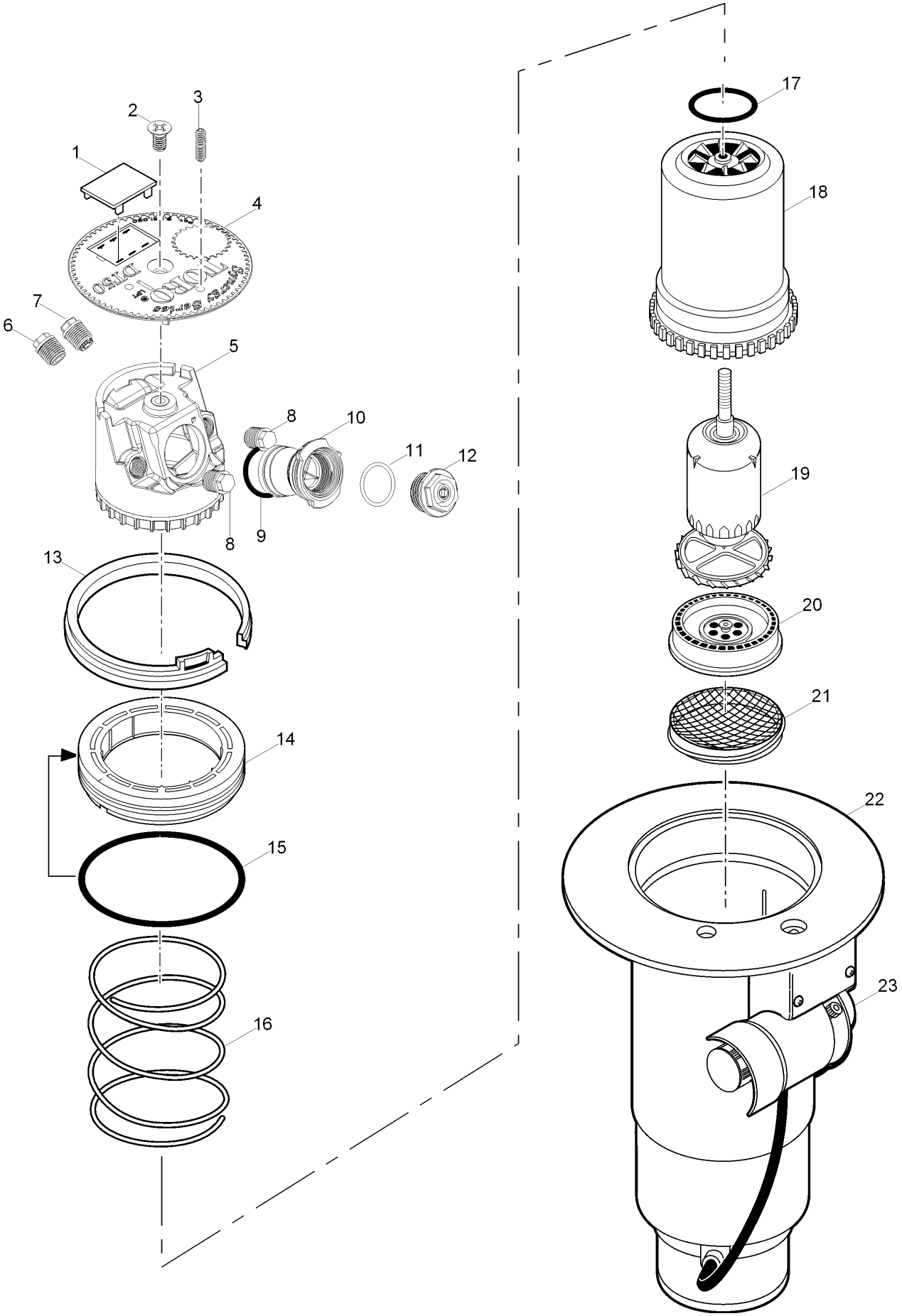

DT54 Series Sprinkler (continued)

Ref.	Part Number	Qty.	Description
1	89-1589		Plug, Cap (Black)
2	102-0362		Screw, Cap
3	363-4839		Radius Reduction Screw
4	102-4753		Cap, Dt 54/55
4	102-5589		Cap, Dt 54/55, Effluent
5	102-5837		Nozzle Base Assembly
6	102-2925		Intermediate Nozzle, Blue (Used W/ #1 Main)
6	102-2926		Intermediate Nozzle, Orange (Used W/ #2 Main)
6	102-2928		Intermediate Nozzle, Red (Used W/ #3 Main)
6	102-2929		Intermediate Nozzle, Beige (Used W/ #4-5 Mains)
6	102-6944		Intermediate Nozzle Assy., Red W/ Stream Straightener (Used W/ #6 Main)
6	102-6945		Intermediate Nozzle Assy., Gray W/ Stream Straightener (Used W/ #7-9 Mains)
6	102-6883		Intermediate Nozzle, Brown (Used W/ #7-8 Mains, Front Position, Right Of Main)
7	102-6937		Nozzle Assy. Inner, Yellow Nozzle W/ Yellow Helical Restrictor
8	102-4335		Plug, Nozzle
9	102-5978		O-Ring, Nozzle Housing
10	102-5597		Nozzle Housing Assy. (Includes Item 9)
11	363-4978	1	O-Ring, Main Nozzle
12	102-0725		Nozzle, Main, #31, Yellow
12	102-7001		Nozzle, Main, #32, Blue
12	102-0727		Nozzle, Main, #33, Brown
12	102-7002		Nozzle, Main, #34, Orange
12	102-6908		Nozzle, Main, #35, Green
12	102-0730		Nozzle, Main, #36, Gray
12	102-4261		Nozzle, Main, #37, Black
12	102-4260		Nozzle, Main, #58, Red
12	102-4259		Nozzle, Main, #59, Beige
13	35-6119		Snap Ring, Riser
14	102-0136		Retainer, Seal, 1.5"
15	363-4103		O-Ring, Body
16	102-0151		Spring, Return
17	363-4167		O-Ring, Nozzle Base
18	102-0203		Riser
19	102-4503		Drive Assembly, 12-Pack
20	102-6929		Stator, Low Flow, High Velocity, Blue (Used W/ #1-4 Mains)
20	102-1940		Stator Assembly, Medium Flow, White (Used W/ #5-8 Mains)
20	102-1941		Stator Assembly, High-Flow, White (Used W/ #9 Main)
21	102-1715		Screen, Riser
22			Body Assembly (See Separate Golf Body Assembly Section.) ◆
23			Pilot Valve Assembly (See Separate Pilot Valve Assembly Section.) ◆
	102-2208		Nozzle, Main, #30, Blank, White ● ▲
	118-1491	1	Adapter, Main Nozzle ● ▲
	102-5674		Cap, Blank ● ▲
	102-5675		Cap, Blank, Effluent ● ▲
	102-0950		Adapter, Conversion ● ▲
	102-5011		Adapter,Conversion, 690 ● ▲
	YARDMARKYEL10		Yardage Marker, Yellow (10-Sheets Per Pack) ● ▲
	YARDMARKLAV10		Yardage Marker, Lavender (For Non-Potable Water Applications) ● ▲
	DT54-5154		Conversion, Full Circle, W/ #51-54 Nozzles ● ❑ ▲
	DT54-5154E		Conversion, Full Circle, W/ #51-54 Nozzles And Effluent Cap ● ❑ ▲
	DT54-5558		Conversion, Full Circle, W/ #55-58 Nozzles ● ❑ ▲
	DT54-5558E		Conversion, Full Circle, W/ #55-58 Nozzles And Effluent Cap ● ❑ ▲
	DT54-59		Conversion, Full Circle, W/ #59 Nozzle ● ❑ ▲
	DT54-59		Conversion, Full Circle, W/ #59 Nozzle ● ❑ ▲
	995-09		Valve Removal Tool ■ ▲
	995-101		Valve Insertion Tool ■ ▲
	995-15		Selector Tool (Flag Key) ■ ▲
	995-99		Nut Driver, 5/8" (For Main Nozzle) ■ ▲
	995-105		Nut Driver, 5/16" (For Inner & Intermediate Nozzles And Plugs) ■ ▲
	995-83		Multi-Purpose Tool ■ ▲
	995-85		Riser Removal Tool ■ ▲
	995-100		Valve Snap Ring Pliers With Screen Remover ■ ▲
	995-102	1	Riser Hold-Up Tool, Universal ■
	118-0954	1	Riser Hold-Up Tool, Red ● ▲

● SERVICE ITEMS
▲ Not illustrated
❑ Order Through Finished Goods Distribution System - Minneapolis
■ SERVICE TOOLS
◆ Not serviced separately

DT55

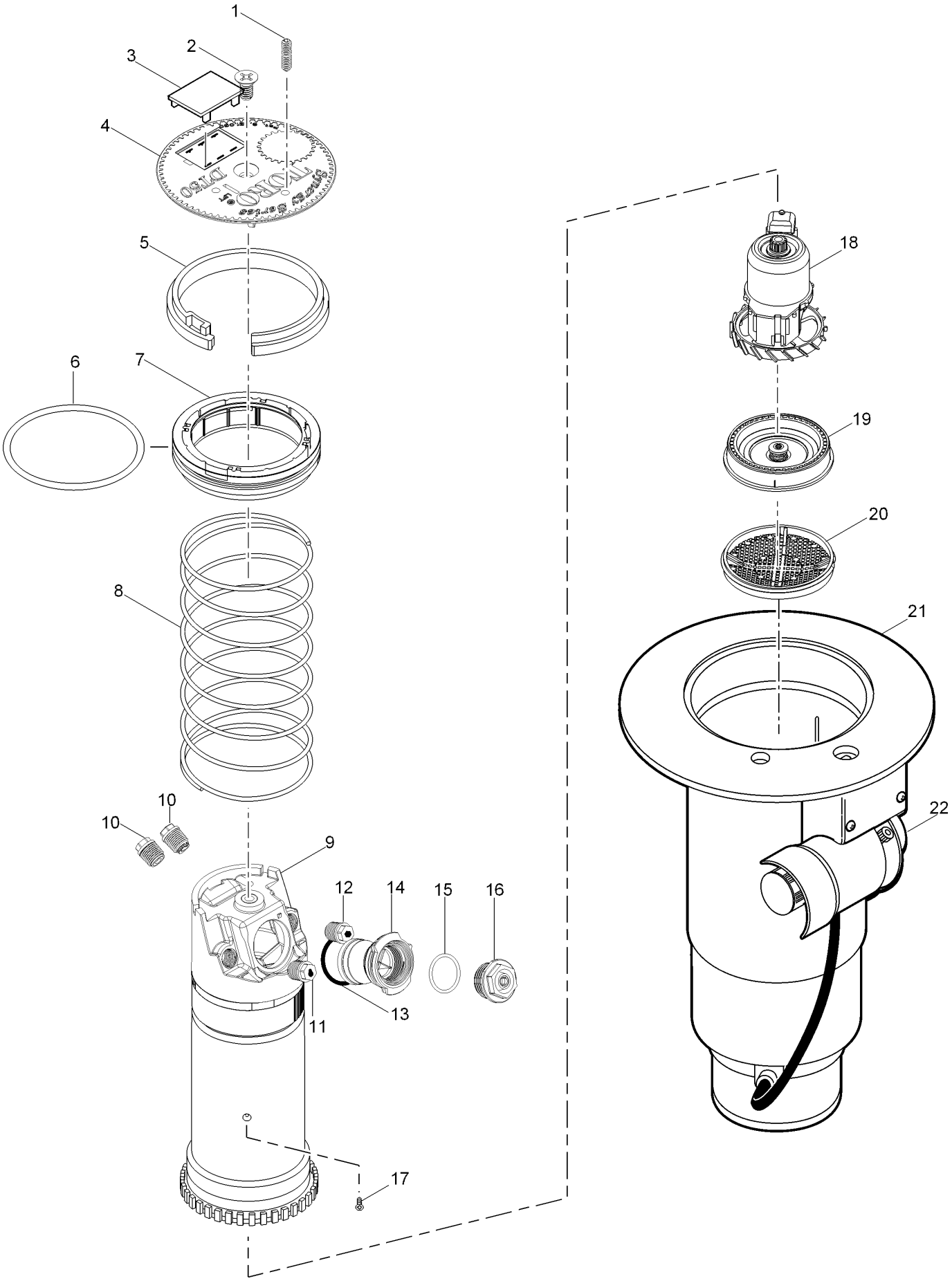

DT55 (continued)

Ref.	Part Number	Qty.	Description
1	363-4839	1	Radius Reduction Screw
2	102-6138	1	Screw, Cap, Black
3	89-1589	1	Plug, Cap (Black)
4	102-4753	1	Cap, Dt 54/55
4	102-5589	1	Cap, Dt 54/55, Effluent
5	35-6119	1	Snap Ring, Riser
6	363-4103	1	O-Ring, Body
7	102-0136	1	Retainer, Seal, 1.5"
8	102-0151	1	Spring, Return
9	102-5982	1	Riser Assembly
10	102-4335	2	Plug, Nozzle
11	102-5670	1	Nozzle Assy. Inner, Yellow W/ White Helical Restrictor (Used W/ #1-5 Mains)
11	102-6531	1	Nozzle Assy., Inner, Green W/ White Helical Restrictor (Used W/ #6-9 Mains)
12	102-6884	1	Intermediate Nozzle, Yellow (Used W/ #2-4 Mains)
12	102-6885	1	Intermediate Nozzle, Green (Used W/ #5-9 Mains)
12	102-5671	1	Intermediate Nozzle Assy., Brown W/ Stream Straightener (Used W/ #1 Main)
13	102-5978	1	O-Ring, Nozzle Housing
14	102-5597	1	Nozzle Housing Assy. (Includes Item 13)
15	363-4978	1	O-Ring, Main Nozzle
16	102-6906	1	Nozzle, Main, #31, Yellow
16	102-0726	1	Nozzle, Main, #32, Blue
16	102-6907	1	Nozzle, Main, #33, Brown
16	102-0728	1	Nozzle, Main, #34, Orange
16	102-6955	1	Nozzle, Main, #35, Green
16	102-6935	1	Nozzle, Main, #36, Gray
16	102-6936	1	Nozzle, Main, #37, Black
16	102-6909	1	Nozzle, Main, #58, Red
16	102-4259	1	Nozzle, Main, #59, Beige
17	363-4236	1	Screw, Drive
18	102-4504	1	Drive Assy., 12-Pack
19	102-1939	1	Stator Assembly, Low Flow, Yellow (Used W/ #1-4 Mains)
19	102-1940	1	Stator Assembly, Medium Flow, White (Used W/ #5-8 Mains)
19	102-1941	1	Stator Assembly, High-Flow, White (Used W// #9 Main)
20	102-1715	1	Screen, Riser
21		1	Body Assembly (See Golf Sprinkler Body Assembly Section) ◆
22		1	Pilot Valve Assembly (See Pilot Valve Assembly Section) ◆

Ref.	Part Number	Qty.	Description
	102-2208		Nozzle, Main, #30, Blank, White ● ▲
	118-1491	1	Adapter, Main Nozzle ● ▲
	102-5674		Cap, Blank ● ▲
	102-5675		Cap, Blank, Effluent ● ▲
	102-0950		Adapter, Conversion ● ▲
	102-5011		Adapter,Conversion, 690 ● ▲
	YARDMARKYEL	10	Yardage Marker, Yellow (10-Sheets Per Pack) ● ▲
	YARDMARKLAV	10	Yardage Marker, Lavender (For Non-Potable Water Applications) ● ▲
	DT55-5154		Conversion, Part & Full Circle, W/ #51-54 Nozzles ● ▲ ❑
	DT55-5154E		Conversion, Part & Full Circle, W/ #51-54 Nozzles And Effluent Cap ● ▲ ❑
	DT55-5154R		Conversion, Part & Full Circle, W/ #51-54 Nozzles For Ribless Bodies ● ▲ ❑
	DT55-5154RE		Conversion, Part & Full Circle, W/ #51-54 Nozzles & Effluent Cap For Ribless Bodies ● ▲ ❑
	DT55-5558		Conversion, Part & Full Circle, W/ #55-58 Nozzles ● ▲ ❑
	DT55-5558E		Conversion, Part & Full Circle, W/ #55-58 Nozzles And Effluent Cap ● ▲ ❑
	DT55-5558R		Conversion, Part & Full Circle, W/ #55-58 Nozzles For Ribless Bodies ● ▲ ❑
	DT55-5558RE		Conversion, Part & Full Circle, W/ #55-58 Nozzles & Effluent Cap For Ribless Bodies ● ▲ ❑
	DT55-59		Conversion, Part & Full Circle, W/ #59 Nozzle ● ▲ ❑
	DT55-59E		Conversion, Part & Full Circle, W/ #59 Nozzle And Effluent Cap ● ▲
	DT55-59R		Conversion, Part & Full Circle, W/ #59 Nozzle For Ribless Bodies ● ▲ ❑
	DT55-59RE		Conversion, Part & Full Circle, W/ #59 Nozzle & Effluent Cap For Ribless Bodies ● ▲ ❑
	995-09		Valve Removal Tool ■ ▲
	995-101		Valve Insertion Tool ■ ▲
	995-15		Selector Tool (Flag Key) ■ ▲
	995-99		Nut Driver, 5/8" (For Main Nozzle) ■ ▲

● SERVICE ITEMS
▲ Not illustrated
❑ Order Through Finished Goods Distribution System - Minneapolis
■ SERVICE TOOLS
◆ Not serviced separately

DT55 (continued)

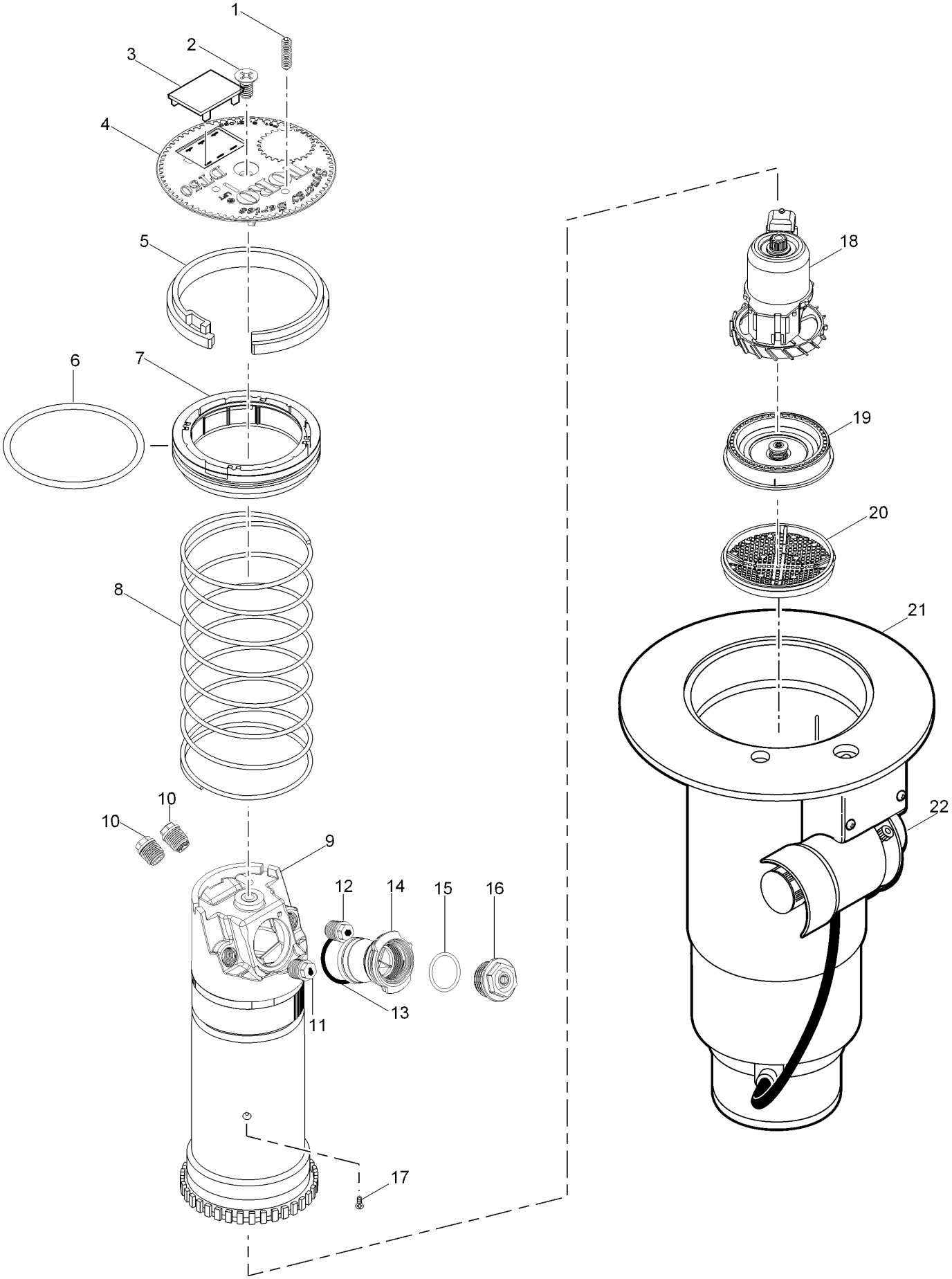

● SERVICE ITEMS
▲ Not illustrated
❑ Order Through Finished Goods Distribution System - Minneapolis

■ SERVICE TOOLS
◆ Not serviced separately

DT55 Ribless Body Conversion

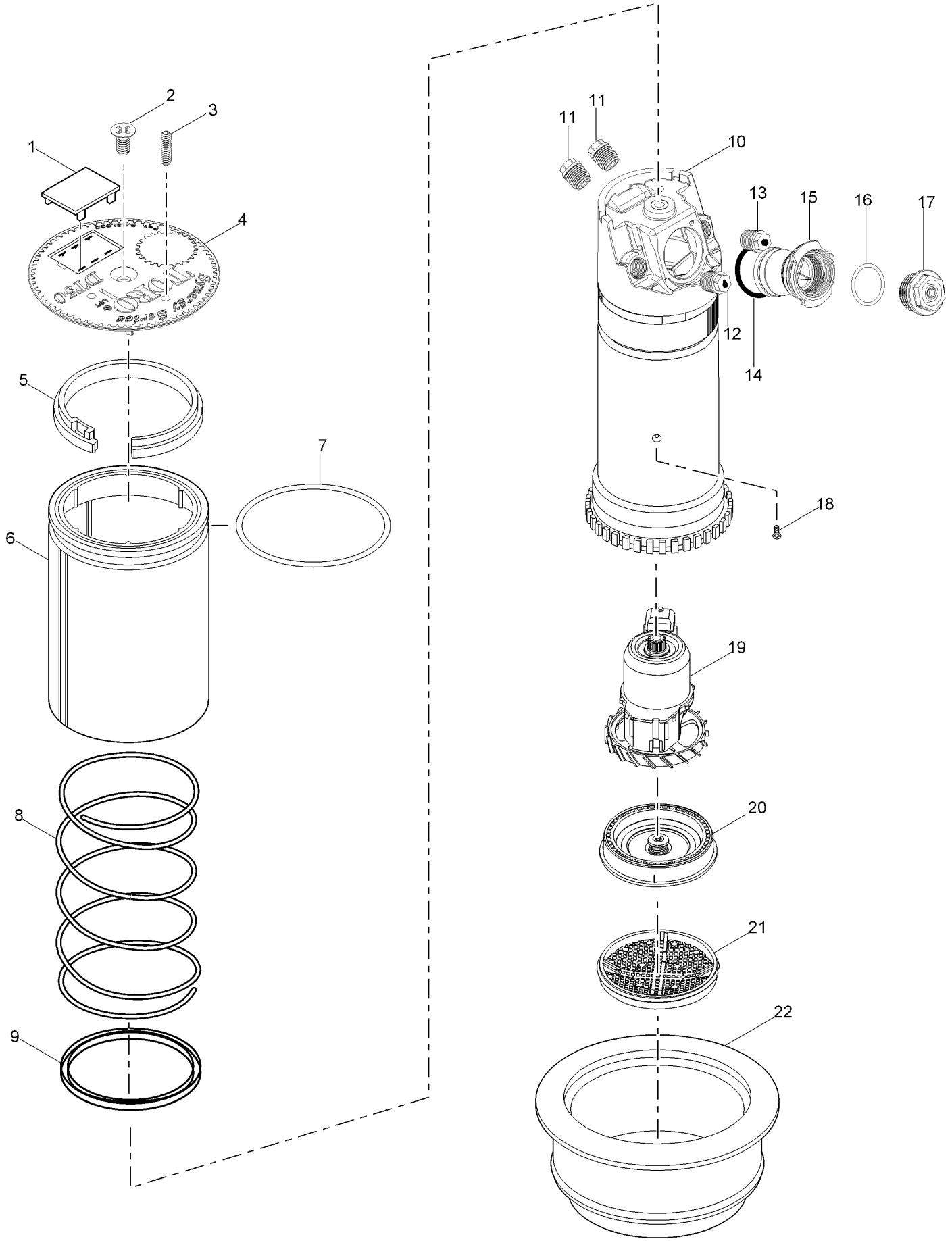

DT55 Ribless Body Conversion (continued)

Ref.	Part Number	Qty.	Description
1	89-1589	1	Plug, Cap (Black)
2	102-6138	1	Screw, Cap, Black
3	363-4839	1	Radius Reduction Screw
4	102-4753	1	Cap, Dt 54/55
4	102-5589	1	Cap, Dt 54/55, Effluent
5	35-6119	1	Snap Ring, Riser
6	89-7568	1	Sleeve, Retainer, O-Ring, Conversion
7	363-4103	1	O-Ring, Body
8	102-0151	1	Spring, Return
9	89-7569	1	Seal, Riser
10	102-5730	1	Riser Assembly
11	102-4335	2	Plug, Nozzle
12	102-5670	1	Nozzle Assy. Inner, Yellow W/ White Helical Restrictor (Used W/ #1-5 Mains)
12	102-6531	1	Nozzle Assy., Inner, Green W/ White Helical Restrictor (Used W/ #6-9 Mains)
13	102-5671	1	Intermediate Nozzle Assy., Brown W/ Stream Straightener (Used W/ #1 Main)
13	102-6884	1	Intermediate Nozzle, Yellow (Used W/ #2-4 Mains)
13	102-6885	1	Intermediate Nozzle, Green (Used W/ #5-9 Mains)
14	102-5978	1	O-Ring, Nozzle Housing
15	102-5597	1	Nozzle Housing Assy. (Includes Item 14)
16	363-4978	1	O-Ring, Main Nozzle
17	102-6906	1	Nozzle, Main, #31, Yellow
17	102-0726	1	Nozzle, Main, #32, Blue
17	102-6907	1	Nozzle, Main, #33, Brown
17	102-0728	1	Nozzle, Main, #34, Orange
17	102-6955	1	Nozzle, Main, #35, Green
17	102-6935	1	Nozzle, Main, #36, Gray
17	102-6936	1	Nozzle, Main, #37, Black
17	102-6909	1	Nozzle, Main, #58, Red
17	102-4259	1	Nozzle, Main, #59, Beige
18	363-4236	1	Screw, Drive
19	102-4504	1	Drive Assy., 12-Pack
20	102-1939	1	Stator Assembly, Low Flow, Yellow (Used W/ #1-4 Mains)
20	102-1940	1	Stator Assembly, Medium Flow, White (Used W/ #5-8 Mains)
20	102-1941	1	Stator Assembly, High-Flow, White (Used W/ #9 Main)
21	102-1715	1	Screen, Riser
22	102-0950	1	Adapter, Conversion
	102-5674		Cap, Blank ● ▲
	102-5675		Cap, Blank, Effluent ● ▲
	118-1491	1	Adapter, Main Nozzle ● ▲
	YARDMARKYEL	10	Yardage Marker, Yellow (10-Sheets Per Pack) ● ▲
	YARDMARKLAV	10	Yardage Marker, Lavender (For Non-Potable Water Applications) ● ▲
	DT55-5154R		Conversion, Part & Full Circle, W/ #51-54 Nozzles For Ribless Bodies ● ▲ ◆
	DT55-5154RE		Conversion, Part & Full Circle, W/ #51-54 Nozzles & Effluent Cap For Ribless Bodies ● ▲ ◆
	DT55-5558R		Conversion, Part & Full Circle, W/ #55-58 Nozzles For Ribless Bodies ● ▲ ◆
	DT55-5558RE		Conversion, Part & Full Circle, W/ #55-58 Nozzles & Effluent Cap For Ribless Bodies ● ▲ ◆
	DT55-59R		Conversion, Part & Full Circle, W/ #59 Nozzle For Ribless Bodies ● ▲ ◆
	DT55-59RE		Conversion, Part & Full Circle, W/ #59 Nozzle & Effluent Cap For Ribless Bodies ● ▲ ◆
	995-09	1	Valve Removal Tool ■ ▲
	995-101	1	Valve Insertion Tool ■ ▲
	995-15		Selector Tool (Flag Key) ■ ▲
	995-99		Nut Driver, 5/8" (For Main Nozzle) ■ ▲
	995-105		Nut Driver, 5/16" (For Inner & Intermediate Nozzles And Plugs) ■ ▲
	995-83		Multi-Purpose Tool ■ ▲
	995-85		Riser Removal Tool ■ ▲
	995-100		Valve Snap Ring Pliers With Screen Remover ■ ▲
	995-102	1	Riser Hold-Up Tool, Universal ■ ▲
	118-0954	1	Riser Hold-Up Tool, Red ● ▲

● SERVICE ITEMS
▲ Not illustrated
◆ Order Through Finished Goods Distribution System - Minneapolis
■ SERVICE TOOLS

FLX34 Series Golf Sprinkler w/ Dual Trajectory

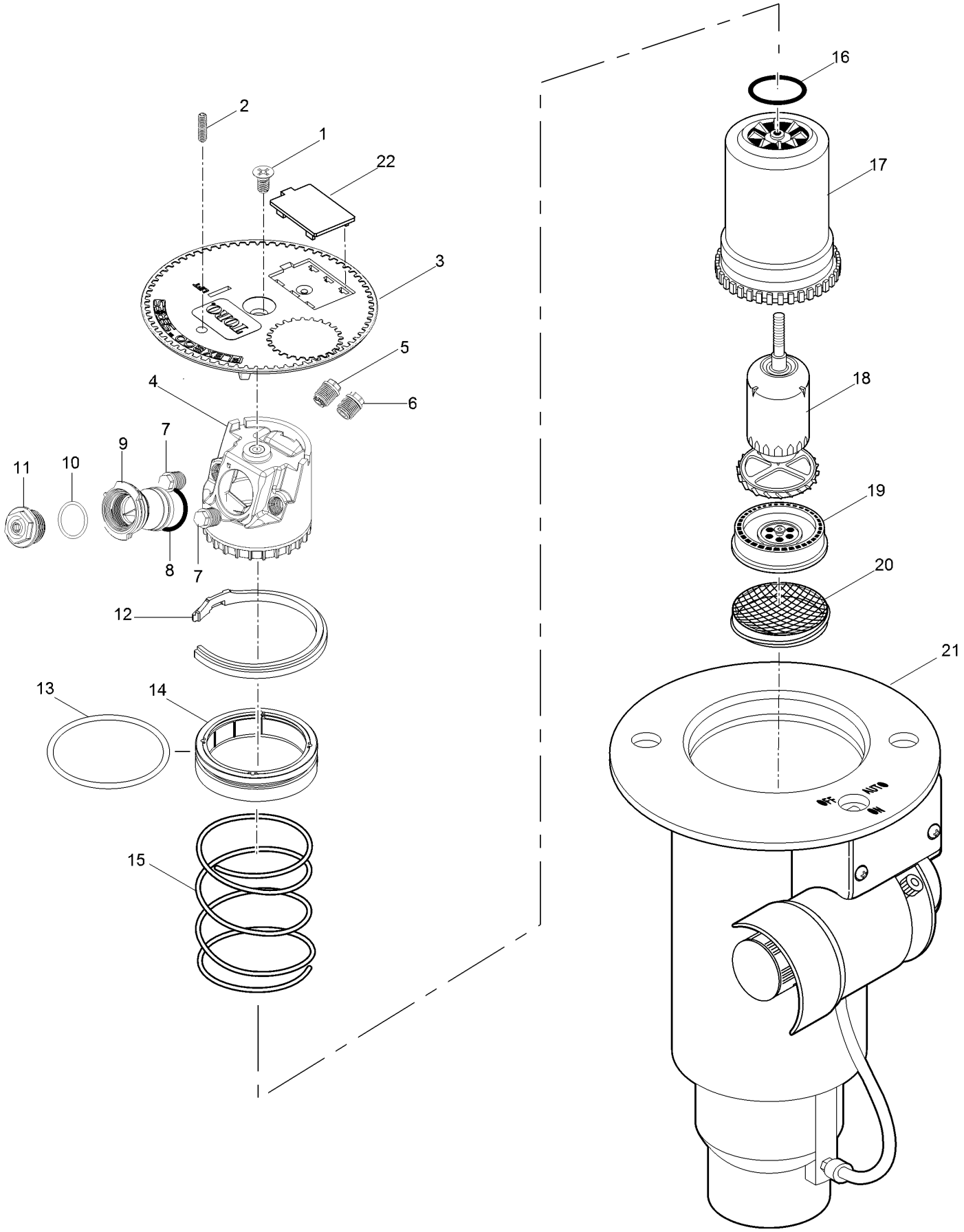

FLX34 Series Golf Sprinkler w/ Dual Trajectory (continued)

Ref.	Part Number	Qty.	Description
1	102-0362	1	Screw, Cap
2	363-4839	1	Radius Reduction Screw
3	118-6918	1	Cap, Flx34 (Black)
3	118-6919	1	Cap, Flx34, Effluent (Lavender)
4	102-5837	1	Nozzle Base Assembly
5	102-2925	1	Intermediate Nozzle, Blue (Used With #31 Main Nozzle)
5	102-2926	1	Intermediate Nozzle, Orange (Used With #32 Main Nozzle)
5	102-2928	1	Intermediate Nozzle, Red (Used With #33 Main Nozzle)
5	102-2929	1	Intermediate Nozzle, Beige (Used With #34 And #35 Main Nozzles)
5	102-6944	1	Intermediate Nozzle Assy., Red W/ Stream Straightener (Used With #36 Main Nozzle)
5	102-6945	1	Intermediate Nozzle Assy., Gray W/ Stream Straightener (Used With #37 Main Nozzle)
6	102-6937	1	Nozzle Assy. Inner, Yellow Nozzle W/ Yellow Helical Restrictor
7	102-4335	2	Plug, Nozzle
8	102-5978	1	O-Ring, Nozzle Housing
9	102-5597	1	Nozzle Housing Assy.
10	363-4978	1	O-Ring, Main Nozzle
11	102-0725	1	Nozzle, Main, #31, Yellow
11	102-7001	1	Nozzle, Main, #32, Blue
11	102-0727	1	Nozzle, Main, #33, Brown
11	102-7002	1	Nozzle, Main, #34, Orange
11	102-6908	1	Nozzle, Main, #35, Green
11	102-0730	1	Nozzle, Main, #36, Gray
11	102-4261	1	Nozzle, Main, #37, Black
12	89-1385	1	Snap Ring, Riser
13	363-4102	1	O-Ring, Paraffin As-568 232
14	102-0134	1	Retainer, Seal
15	102-0151	1	Spring, Return
16	363-4167	1	O-Ring, Nozzle Base
17	102-0202	1	Riser
18	102-4503	1	Drive Assembly, 12-Pack
19	102-6929	1	Stator, Low Flow, High Velocity, Blue (Used With #31-34 Main Nozzles)
19	102-1940	1	Stator Assembly, Medium Flow, White (Used With #35-37 Main Nozzles)
20	102-1715	1	Screen, Riser
21		1	Body Assembly (See Golf Sprinkler Body Assembly Section) ▲
22	89-1589	1	Plug, Cap (Black)
22	118-1103	1	Plug, Cap (Lavender)
	995-08	1	Valve Removal Tool ■●
	995-76	1	Valve Insertion Tool ■●
	995-15	1	Selector Tool (Flag Key) ■●
	995-99	1	Nut Driver, 5/8" (For Main Nozzle) ■●
	995-105	1	Nut Driver, 5/16" (For Inner & Intermediate Nozzles And Plugs) ■●
	995-83	1	Multi-Purpose Tool ■●
	995-85	1	Riser Removal Tool ■●
	995-100	1	Valve Snap Ring Pliers With Screen Remover ■●
	995-102	1	Riser Hold-Up Tool, Universal ■●
	118-0954	1	Riser Hold-Up Tool, Red ■●
	118-1521	1	Main Nozzle Adapter ●■
	995-82	1	Arc Adjustment Tool, 3/32 ■●
	102-5672	1	Cap, Blank ■●
	102-5673	1	Cap, Blank, Effluent ■●

● SERVICE ITEMS
▲ Not serviced separately
■ Not illustrated

FLX34B Series Sprinkler w/ Dual Trajectory

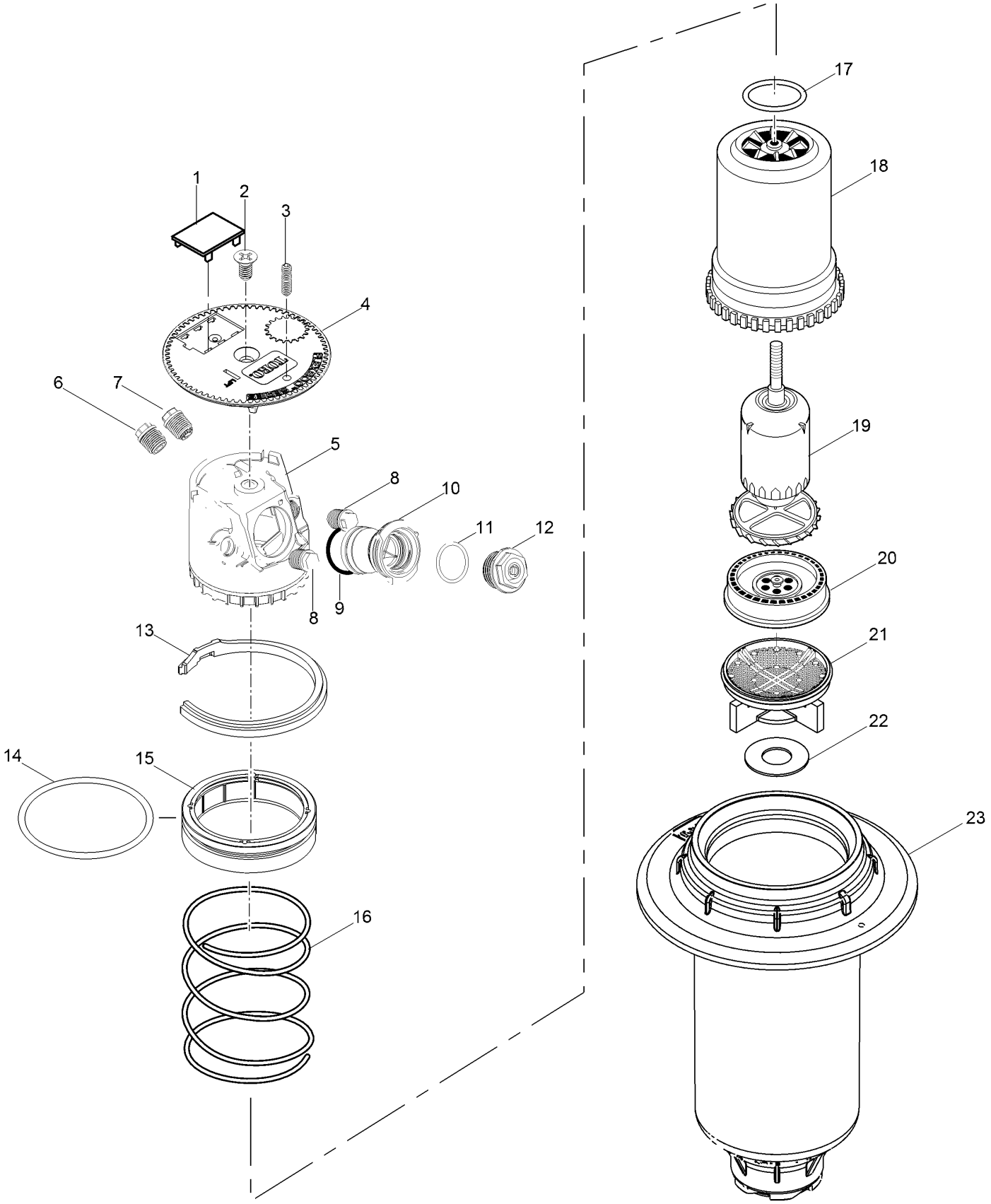

FLX34B Series Sprinkler w/ Dual Trajectory (continued)

Ref.	Part Number	Qty.	Description
1	89-1589	1	Plug, Cap (Black)
1	118-1103	1	Plug, Cap (Lavender)
2	102-0362	1	Screw, Cap
3	363-4839	1	Radius Reduction Screw
4	118-6918	1	Cap, Flx34B (Black)
4	118-6919	1	Cap, Flx34B, Effluent (Lavender)
5	102-5837	1	Nozzle Base Assembly
6	102-2925	1	Intermediate Nozzle, Blue (Used W/ #1 Main)
6	102-2926	1	Intermediate Nozzle, Orange (Used W/ #2 Main)
6	102-2928	1	Intermediate Nozzle, Red (Used W/ #3 Main)
6	102-2929	1	Intermediate Nozzle, Beige (Used W/ #4 & 5 Mains)
6	102-6944	1	Intermediate Nozzle Assy., Red W/ Stream Straightener (Used W/ #6 Main)
6	102-6945	1	Intermediate Nozzle Assy., Gray W/ Stream Straightener (Used With #7 & 8 Mains)
6	102-6883	1	Intermediate Nozzle, Brown (Used W/ #7 & 8 Main, Front Position On The Right Of Main)
7	102-6937	1	Nozzle Assy. Inner, Yellow Nozzle W/ Yellow Helical Restrictor
8	102-4335	2	Plug, Nozzle
9	102-5978	1	O-Ring, Nozzle Housing
10	102-5597	1	Nozzle Housing Assy. (Includes Item 9)
11	363-4978	1	O-Ring, Main Nozzle
12	102-0725	1	Nozzle, Main, #31, Yellow
12	102-7001	1	Nozzle, Main, #32, Blue
12	102-0727	1	Nozzle, Main, #33, Brown
12	102-7002	1	Nozzle, Main, #34, Orange
12	102-6908	1	Nozzle, Main, #35, Green
12	102-0730	1	Nozzle, Main, #36, Gray
12	102-4261	1	Nozzle, Main, #37, Black
12	102-4260	1	Nozzle, Main, #38, Red
13	89-1385	1	Snap Ring, Riser
14	363-4102	1	O-Ring, Paraffin As-568 232
15	102-0134	1	Retainer, Seal
16	102-0151	1	Spring, Return
17	363-4167	1	O-Ring, Nozzle Base
18	102-0202	1	Riser
19	102-4503	1	Drive Assembly, 12-Pack
20	102-6929	1	Stator, Low Flow, High Velocity, Blue (Used W/ #1-4 Main Nozzles)
20	102-1940	1	Stator Assembly, Medium Flow, White (Used W/ #5-8 Main Nozzles)
21	102-5152	1	Screen, Riser, W/ Check Seal Holder
22	102-7437	1	Seal, Check
23	102-7419	1	Body, Npt
23	102-7420	1	Body, Bsp
23	102-7421	1	Body, Acme
	102-2208		Nozzle, Main, #30, Blank, White ●▲
	118-1521	1	Main Nozzle Adapter ●▲
	102-5672		Cap, Blank ●▲
	102-5673		Cap, Blank, Effluent ●▲
	YARDMARKYEL	1	Yardage Marker, Yellow (10-Sheets Per Pack) ●▲
	YARDMARKLAV	1	Yardage Marker, Lavender (For Non-Potable Water Applications) ●▲
	995-99		Nut Driver, 5/8" (For Main Nozzle) ■▲
	995-105		Nut Driver, 5/16" (For Inner & Intermediate Nozzles And Plugs) ■▲
	995-83		Multi-Purpose Tool ■▲
	995-85		Riser Removal Tool ■▲
	995-102	1	Riser Hold-Up Tool, Universal ■▲
	118-0954	1	Riser Hold-Up Tool, Red ●▲
	995-82	1	Arc Adjustment Tool, 3/32 ●▲

● SERVICE ITEMS
▲ Not illustrated

■ SERVICE TOOLS

FLX35 Series Golf Sprinkler w/ Dual Trajectory

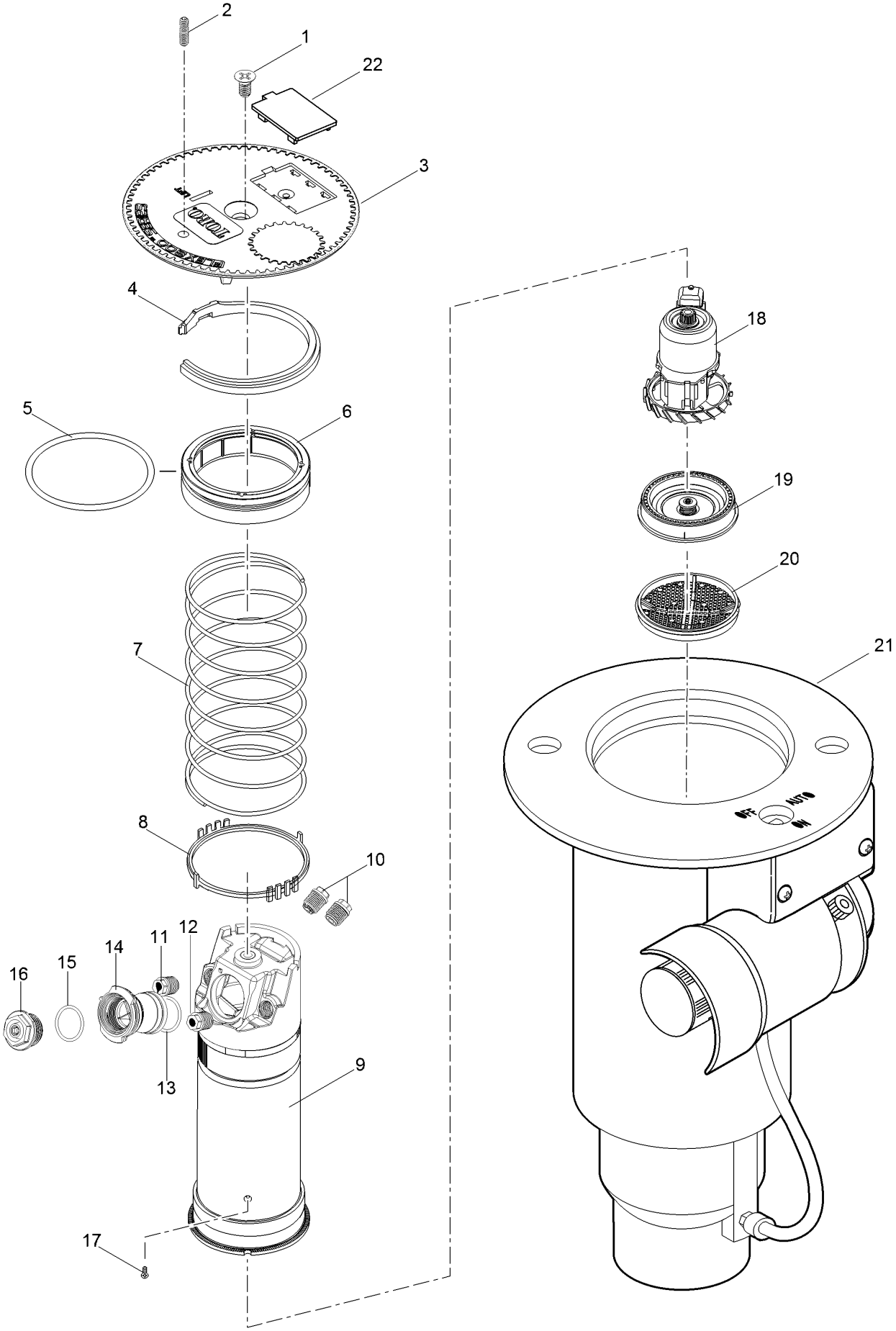

FLX35 Series Golf Sprinkler w/ Dual Trajectory (continued)

Ref.	Part Number	Qty.	Description
1	102-6138	1	Screw, Cap, Black
2	363-4839	1	Radius Reduction Screw
3	118-6918	1	Cap, Flx34 (Black)
3	118-6919	1	Cap, Flx34, Effluent (Lavender)
4	89-1385	1	Snap Ring, Riser
5	363-4102	1	O-Ring, Paraffin As-568 232
6	102-0134	1	Retainer, Seal
7	102-0151	1	Spring, Return
8	102-2619	1	Ratchet Ring, 1"
9	118-1079	1	Riser Assembly
10	102-4335	2	Plug, Nozzle
11	102-5670	1	Nozzle Assy. Inner, Yellow W/ White Helical Restrictor (Used With #30-35 Main Nozzles)
11	102-6531	1	Nozzle Assy., Inner, Green W/ White Helical Restrictor (Used With #36-37 Main Nozzles)
12	102-6942	1	Intermediate Nozzle Assy., Beige W/ Stream Straightener (Used With #30 Main Nozzle)
12	102-5671	1	Intermediate Nozzle Assy., Brown W/ Stream Straightener (Used With #31 Main Nozzle)
12	102-6884	1	Intermediate Nozzle, Yellow (Used With #32-34 Main Nozzles)
12	102-6885	1	Intermediate Nozzle, Green (Used With #35-37 Main Nozzles)
13	102-5978	1	O-Ring, Nozzle Housing
14	102-5597	1	Nozzle Housing Assy.
15	363-4978	1	O-Ring, Main Nozzle
16	102-2208	1	Nozzle, Main, #30, Blank, White
16	102-6906	1	Nozzle, Main, #31, Yellow
16	102-0726	1	Nozzle, Main, #32, Blue
16	102-6907	1	Nozzle, Main, #33, Brown
16	102-0728	1	Nozzle, Main, #34, Orange
16	102-6955	1	Nozzle, Main, #35, Green
16	102-6935	1	Nozzle, Main, #36, Gray
16	102-6936	1	Nozzle, Main, #37, Black
16	118-1521	1	Main Nozzle Adapter
17	363-4236	1	Screw, Drive
18	102-4504	1	Drive Assy., 12-Pack
19	102-6929	1	Stator, Low Flow, High Velocity, Blue (Used With #30 Main Nozzle)
19	102-1939	1	Stator Assembly, Low Flow, Yellow (Used With #31-34 Main Nozzles)
19	102-1940	1	Stator Assembly, Medium Flow, White (Used With #35-37 Main Nozzles)
20	102-1715	1	Screen, Riser
21		1	Body Assembly (See Golf Body Assembly Section.) ▲
22	89-1589	1	Plug, Cap (Black)
22	118-1103	1	Plug, Cap (Lavender)
	995-08	1	Valve Removal Tool ■●
	995-76	1	Valve Insertion Tool ■●
	995-15	1	Selector Tool (Flag Key) ■●
	995-99	1	Nut Driver, 5/8" (For Main Nozzle) ■●
	995-105	1	Nut Driver, 5/16" (For Inner & Intermediate Nozzles And Plugs) ■●
	995-83	1	Multi-Purpose Tool ■●
	995-85	1	Riser Removal Tool ■●
	995-100	1	Valve Snap Ring Pliers With Screen Remover ■●
	995-102	1	Riser Hold-Up Tool, Universal ■●
	118-0954	1	Riser Hold-Up Tool, Red ■●
	102-5672	1	Cap, Blank ■●
	102-5673	1	Cap, Blank, Effluent ■●
	995-82	1	Arc Adjustment Tool, 3/32 ■●

● SERVICE ITEMS
▲ Not serviced separately
■ Not illustrated

FLX35-6 Series Golf Sprinkler w/ 24-Pos TruJectory

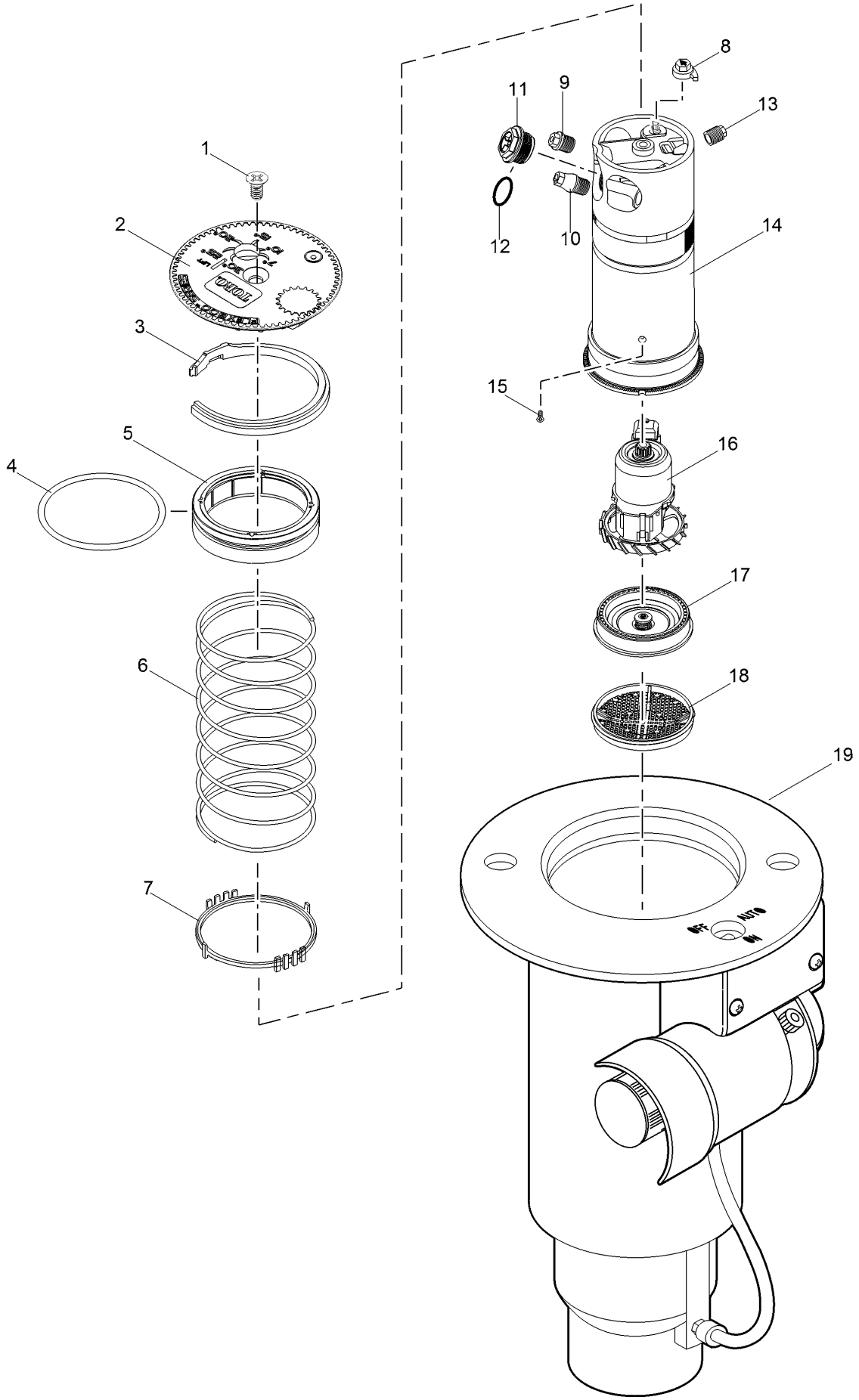

FLX35-6 Series Golf Sprinkler w/ 24-Pos TruJectory (continued)

Ref.	Part Number	Qty.	Description
1	102-6138	1	Screw, Cap, Black
2	118-6920	1	Cap, Black
2	118-6921	1	Cap, Effluent
3	89-1385	1	Snap Ring, Riser
4	363-4102	1	O-Ring, Paraffin As-568 232
5	102-0134	1	Retainer, Seal
6	102-0151	1	Spring, Return
7	102-2619	1	Ratchet Ring, 1"
8	102-5971	1	Trajectory Adjuster
9	102-2925	1	Intermediate Nozzle, Blue (Used With #30, #31, #35 And #36 Main Nozzles)
9	102-2926	1	Intermediate Nozzle, Orange (Used With #33, #34 And #37 Main Nozzles)
9	102-2928	1	Intermediate Nozzle, Red (Used With #32 Main Nozzle)
10	102-2910	1	Nozzle Assembly, Inner
11	102-2208	1	Nozzle, Main, #30, Blank, White
11	102-4587	1	Nozzle, Main, #31, Yellow
11	102-4588	1	Nozzle, Main, #32, Blue
11	102-4589	1	Nozzle, Main, #33, Brown
11	102-0728	1	Nozzle, Main, #34, Orange
11	102-0729	1	Nozzle, Main, #35, Green
11	102-0730	1	Nozzle, Main, #36, Gray
11	102-4261	1	Nozzle, Main, #37, Black
11	118-1521	1	Main Nozzle Adapter
12	363-4978	1	O-Ring, Main Nozzle
13	102-4335	1	Plug, Nozzle
14	102-2892	1	Riser Assembly
15	363-4236	1	Screw, Drive
16	102-4504	1	Drive Assy., 12-Pack
17	102-6929	1	Stator, Low Flow, High Velocity, Blue (Used With #30 Main Nozzle And Nozzle Adapter)
17	102-1939	1	Stator Assembly, Low Flow, Yellow (Used With #31-34 Main Nozzles)
17	102-1940	1	Stator Assembly, Medium Flow, White (Used With #35-37 Main Nozzles)
18	102-1715	1	Screen, Riser
19		1	Body Assembly (See Golf Body Assembly Section.) ▲
	995-08	1	Valve Removal Tool ■●
	995-76	1	Valve Insertion Tool ■●
	995-15	1	Selector Tool (Flag Key) ■●
	995-99	1	Nut Driver, 5/8" (For Main Nozzle) ■●
	995-105	1	Nut Driver, 5/16" (For Inner & Intermediate Nozzles And Plugs) ■●
	995-83	1	Multi-Purpose Tool ■●
	995-85	1	Riser Removal Tool ■●
	995-100	1	Valve Snap Ring Pliers With Screen Remover ■●
	995-102	1	Riser Hold-Up Tool, Universal ■●
	118-0954	1	Riser Hold-Up Tool, Red ■●
	102-2494	1	Cap, Blank ■●
	102-2495	1	Cap, Blank, Effluent ■●

● SERVICE ITEMS
▲ Not serviced separately
■ Not illustrated

FLX35B Series Sprinkler w/ Dual Trajectory

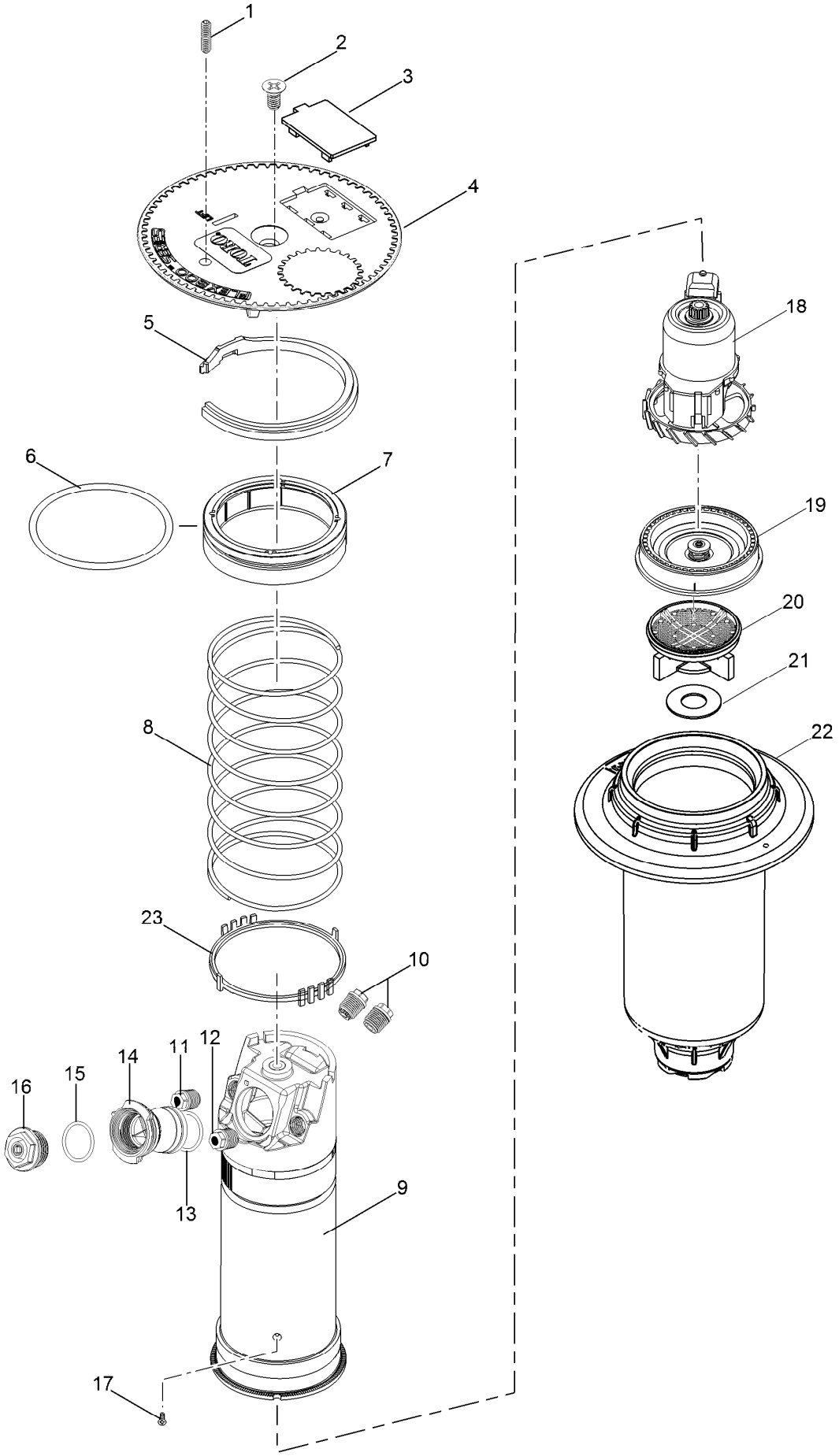

FLX35B Series Sprinkler w/ Dual Trajectory (continued)

Ref.	Part Number	Qty.	Description
1	363-4839	1	Radius Reduction Screw
2	102-6138	1	Screw, Cap, Black
3	89-1589	1	Plug, Cap (Black)
3	118-1103	1	Plug, Cap (Lavender)
4	118-6918	1	Cap, Flx35B
4	118-6919	1	Cap, Flx35B, Effluent
5	89-1385	1	Snap Ring, Riser
6	363-4102	1	O-Ring, Paraffin As-568 232
7	102-0134	1	Retainer, Seal
8	102-0151	1	Spring, Return
9	118-1709	1	Riser Assembly
10	102-4335	2	Plug, Nozzle
11	102-5670	1	Nozzle Assy. Inner, Yellow W/ White Helical Restrictor (Used W/ #0-5 Mains)
11	102-6531	1	Nozzle Assy., Inner, Green W/ White Helical Restrictor (Used W/ #6-8 Mains)
12	102-6942	1	Intermediate Nozzle Assy., Beige W/ Stream Straightener (Used W/ #0 Main)
12	102-5671	1	Intermediate Nozzle Assy., Brown W/ Stream Straightener (Used W/ #1 Main)
12	102-6884	1	Intermediate Nozzle, Yellow (Used W/ #2-4 Mains)
12	102-6885	1	Intermediate Nozzle, Green (Used W/ #5-8 Mains)
13	102-5978	1	O-Ring, Nozzle Housing
14	102-5597	1	Nozzle Housing Assy. (Includes Item 3)
15	363-4978	1	O-Ring, Main Nozzle
16	102-2208	1	Nozzle, Main, #30, Blank, White
16	102-6906	1	Nozzle, Main, #31, Yellow
16	102-0726	1	Nozzle, Main, #32, Blue
16	102-6907	1	Nozzle, Main, #33, Brown
16	102-0728	1	Nozzle, Main, #34, Orange
16	102-6955	1	Nozzle, Main, #35, Green
16	102-6935	1	Nozzle, Main, #36, Gray
16	102-6936	1	Nozzle, Main, #37, Black
16	102-4260	1	Nozzle, Main, #38, Red
16	118-1521	1	Main Nozzle Adapter
17	363-4236	1	Screw, Drive
18	102-4504	1	Drive Assy., 12-Pack
19	102-6929	1	Stator, Low Flow, High Velocity, Blue (Used W/ #0 Main Nozzle)
19	102-1939	1	Stator Assembly, Low Flow, Yellow (Used W/ #1-4 Main Nozzles)
19	102-1940	1	Stator Assembly, Medium Flow, White (Used W/ #5-8 Main Nozzles)
20	102-5152	1	Screen, Riser, W/ Check Seal Holder
21	102-7437	1	Seal, Check
22	102-7419	1	Body, Npt
22	102-7420	1	Body, Bsp
22	102-7421	1	Body, Acme
23	102-2619	1	Ratchet Ring, 1
	102-5672		Cap, Blank ■ ◆
	102-5673		Cap, Blank, Effluent ■ ◆
	YARDMARKYEL	1	Yardage Marker, Yellow (10-Sheets Per Pack) ■ ◆
	YARDMARKLAV	1	Yardage Marker, Lavender (For Non-Potable Water Applications) ■ ◆
	995-99		Nut Driver, 5/8" (For Main Nozzle) ▲ ◆
	995-105		Nut Driver, 5/16" (For Inner & Intermediate Nozzles And Plugs) ▲ ◆
	995-83		Multi-Purpose Tool ● ◆
	995-85		Riser Removal Tool ▲ ◆
	995-102	1	Riser Hold-Up Tool, Universal ▲ ◆
	118-0954	1	Riser Hold-Up Tool, Red ■ ◆
	995-82	1	Arc Adjustment Tool, 3/32 ■ ◆

● Service Tool
▲ SERVICE TOOLS
■ SERVICE ITEMS
◆ Not illustrated

FLX35-6B Series Sprinkler w/ 24-Pos TruJectory

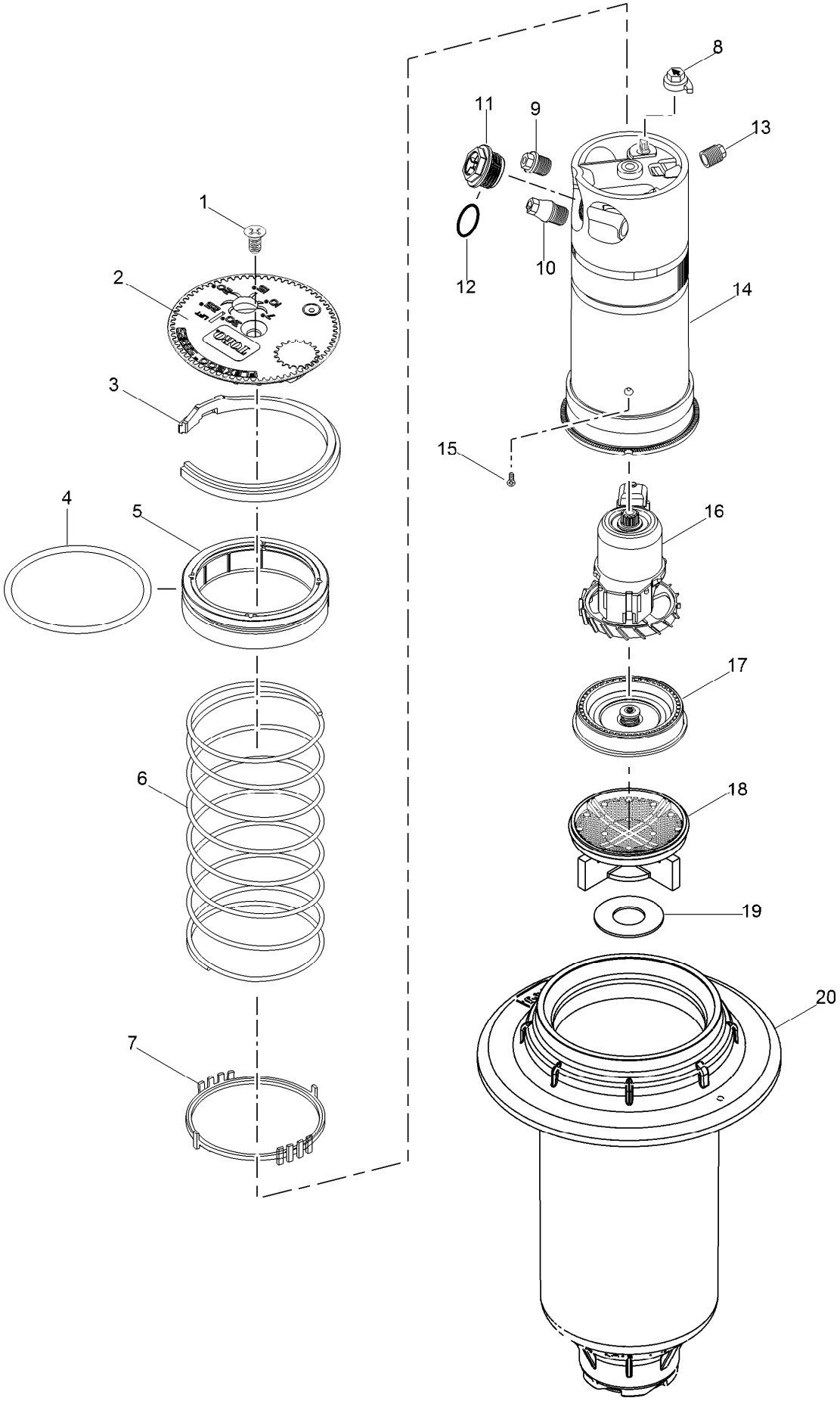

FLX35-6B Series Sprinkler w/ 24-Pos TruJectory (continued)

Ref.	Part Number	Qty.	Description
1	102-6138	1	Screw, Cap, Black
2	118-6920	1	Cap, Black
2	118-6921	1	Cap, Effluent
3	89-1385	1	Snap Ring, Riser
4	363-4102	1	O-Ring, Paraffin As-568 232
5	102-0134	1	Retainer, Seal
6	102-0151	1	Spring, Return
7	102-2619	1	Ratchet Ring, 1"
8	102-5971	1	Trajectory Adjuster
9	102-2925	1	Intermediate Nozzle, Blue (Use W/ #1, #5, #6 & #8 Mains)
9	102-2926	1	Intermediate Nozzle, Orange (Use W/ #3, #4 & #7 Mains)
9	102-2928	1	Intermediate Nozzle, Red (Use W/ #2 Main)
10	102-2910	1	Nozzle Assembly, Inner
11	102-2208	1	Nozzle, Main, #30, Blank, White
11	102-4587	1	Nozzle, Main, #31, Yellow
11	102-4588	1	Nozzle, Main, #32, Blue
11	102-4589	1	Nozzle, Main, #33, Brown
11	102-0728	1	Nozzle, Main, #34, Orange
11	102-0729	1	Nozzle, Main, #35, Green
11	102-0730	1	Nozzle, Main, #36, Gray
11	102-4261	1	Nozzle, Main, #37, Black
11	102-4260	1	Nozzle, Main, #38, Red
11	118-1521	1	Main Nozzle Adapter
12	363-4978	1	O-Ring, Main Nozzle
13	102-4335	1	Plug, Nozzle
14	102-2892	1	Riser Assembly
15	363-4236	1	Screw, Drive
16	102-4504	1	Drive Assy., 12-Pack
17	102-6929	1	Stator, Low Flow, High Velocity, Blue ((Use W/ #0 Main)
17	102-1939	1	Stator Assembly, Low Flow, Yellow (Use W/ #31-#34 Mains)
17	102-1940	1	Stator Assembly, Medium Flow, White (Use W/ #35-#38 Mains)
18	102-5152	1	Screen, Riser, W/ Check Seal Holder
19	102-7437	1	Seal, Check
20	102-7419	1	Body, Npt
20	102-7420	1	Body, Bsp
20	102-7421	1	Body, Acme
	102-2041		Restrictor, Yellow, Inner Nozzle ● ▲
	102-4337	1	Stream Straightener, Intermediate Nozzle ● ▲
	102-2494		Cap, Blank ● ▲
	102-2495		Cap, Blank, Effluent ● ▲
	995-83		Multi-Purpose Tool ■ ▲
	995-85		Riser Removal Tool ■ ▲
	995-99		Nut Driver, 5/8" (For Main Nozzle) ■ ▲
	995-105		Nut Driver, 5/16" (For Inner & Intermediate Nozzles And Plugs) ■ ▲
	995-102		Riser Hold-Up Tool, Universal ■ ▲
	118-0954	1	Riser Hold-Up Tool, Red ■ ▲

● SERVICE ITEMS
▲ Not illustrated

■ SERVICE TOOLS

FLX54 Series Golf Sprinkler w/ Dual Trajectory

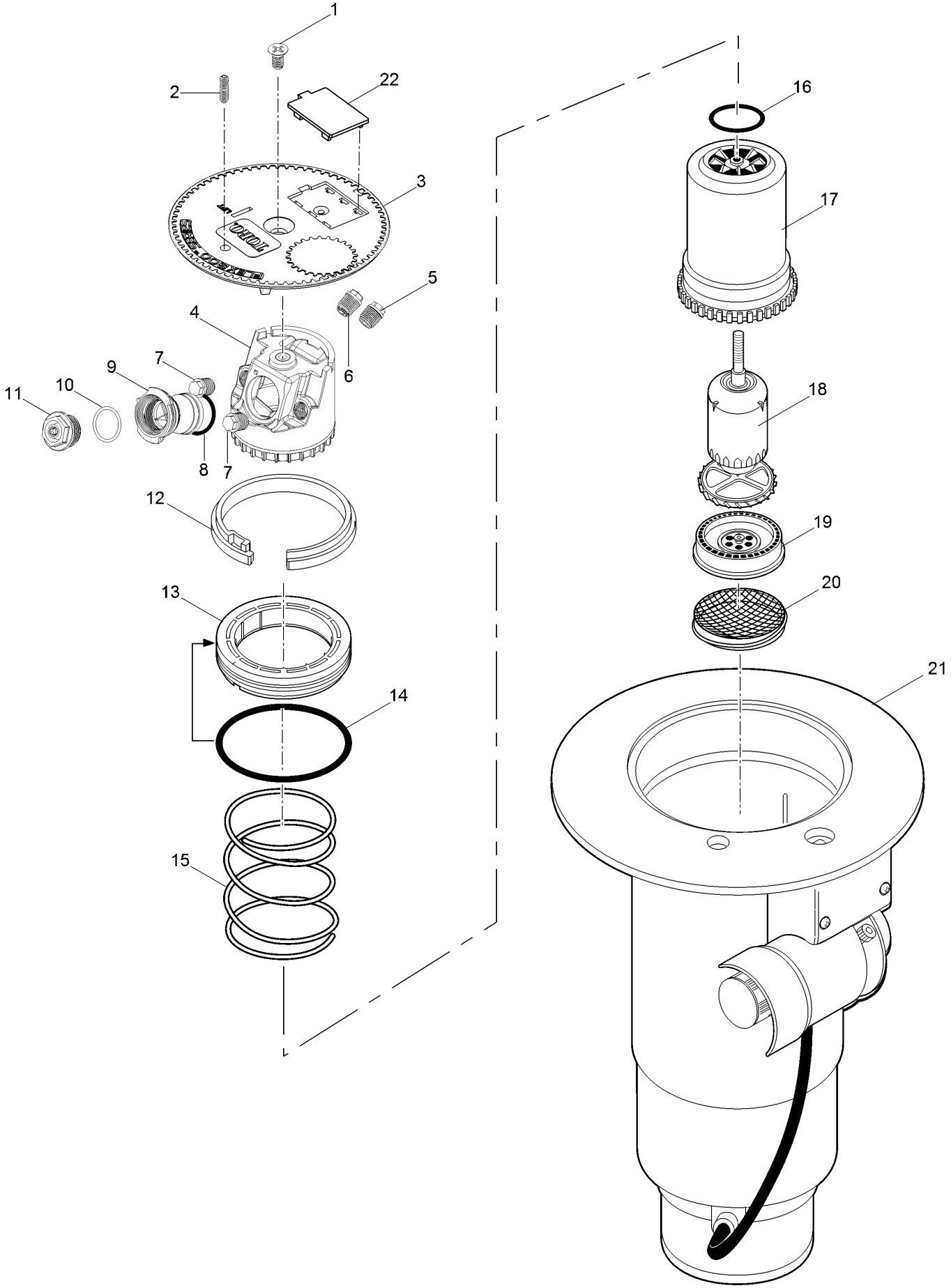

FLX54 Series Golf Sprinkler w/ Dual Trajectory (continued)

Ref.	Part Number	Qty.	Description
1	102-0362	1	Screw, Cap
2	363-4839	1	Radius Reduction Screw
3	118-6922	1	Cap, Black
3	118-6923	1	Cap, Effluent
4	102-5837	1	Nozzle Base Assembly
5	102-2925	1	Intermediate Nozzle, Blue (Used With #51 Main Nozzle)
5	102-2926	1	Intermediate Nozzle, Orange (Used With #52 Main Nozzle)
5	102-2928	1	Intermediate Nozzle, Red (Used With #53 Main Nozzle)
5	102-2929	1	Intermediate Nozzle, Beige (Used With #54 And #55 Main Nozzles)
5	102-6944	1	Intermediate Nozzle Assy., Red W/ Stream Straightener (Used With #56 Main Nozzles)
5	102-6945	1	Intermediate Nozzle Assy., Gray W/ Stream Straightener (Used With #57-59 Main Nozzles)
5	102-6883	1	Intermediate Nozzle, Brown (Used With #57 And #58 Main Nozzles, Front)
6	102-6937	1	Nozzle Assy. Inner, Yellow Nozzle W/ Yellow Helical Restrictor
7	102-4335	2	Plug, Nozzle
8	102-5978	1	O-Ring, Nozzle Housing
9	102-5597	1	Nozzle Housing Assy.
10	363-4978	1	O-Ring, Main Nozzle
11	102-0725	1	Nozzle, Main, #51, Yellow
11	102-7001	1	Nozzle, Main, #52, Blue
11	102-0727	1	Nozzle, Main, #53, Brown
11	102-7002	1	Nozzle, Main, #54, Orange
11	102-6908	1	Nozzle, Main, #55, Green
11	102-0730	1	Nozzle, Main, #56, Gray
11	102-4261	1	Nozzle, Main, #57, Black
11	102-4260	1	Nozzle, Main, #58, Red
11	102-4259	1	Nozzle, Main, #59, Beige
12	35-6119	1	Snap Ring, Riser
13	102-0136	1	Retainer, Seal, 1.5"
14	363-4103	1	O-Ring, Body
15	102-0151	1	Spring, Return
16	363-4167	1	O-Ring, Nozzle Base
17	102-0202	1	Riser
18	102-4503	1	Drive Assembly, 12-Pack
19	102-6929	1	Stator, Low Flow, High Velocity, Blue (Used With #51-54 Main Nozzles)
19	102-1940	1	Stator Assembly, Medium Flow, White (Use With #55-58 Main Nozzles)
19	102-1941	1	Stator Assembly, High-Flow, White (Used With #59 Main Nozzle)
20	102-1715	1	Screen, Riser
21		1	Body Assembly (See Golf Sprinkler Body Assembly Section) ▲
22	89-1589	1	Plug, Cap (Black)
22	118-1103	1	Plug, Cap (Lavender)
	118-1521	1	Main Nozzle Adapter ■●
	995-09	1	Valve Removal Tool ■●
	995-101	1	Valve Insertion Tool ■●
	995-15	1	Selector Tool (Flag Key) ■●
	995-99	1	Nut Driver, 5/8" (For Main Nozzle) ■●
	995-105	1	Nut Driver, 5/16" (For Inner & Intermediate Nozzles And Plugs) ■●
	995-83	1	Multi-Purpose Tool ■●
	995-85	1	Riser Removal Tool ■●
	995-100	1	Valve Snap Ring Pliers With Screen Remover ■●
	995-102	1	Riser Hold-Up Tool, Universal ■●
	118-0954	1	Riser Hold-Up Tool, Red ■●
	102-5674	1	Cap, Blank ■●
	102-5675	1	Cap, Blank, Effluent ■●
	995-82	1	Arc Adjustment Tool, 3/32 ■●

● SERVICE ITEMS
▲ Not serviced separately
■ Not illustrated

FLX54RB R Series Conversion w/ Dual Trajectory

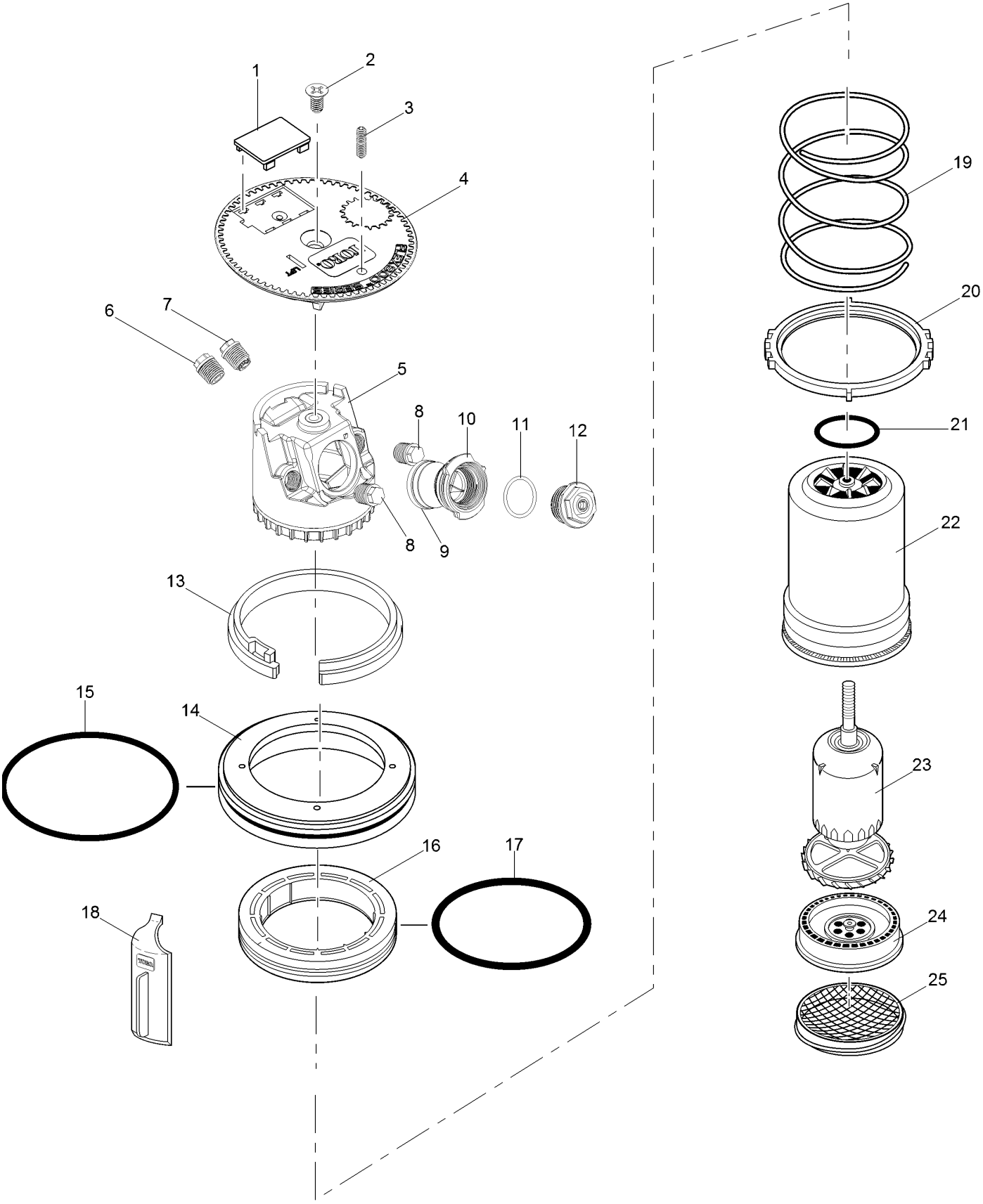

FLX54RB R Series Conversion w/ Dual Trajectory (continued)

Ref.	Part Number	Qty.	Description
1	89-1589	1	Plug, Cap (Black)
1	118-1103	1	Plug, Cap (Lavender)
2	102-0362	1	Screw, Cap
3	363-4839	1	Radius Reduction Screw
4	118-4221	1	Cap, Flx54
5	102-5837	1	Nozzle Base Assembly
6	102-2925	1	Intermediate Nozzle, Blue
6	102-2926	1	Intermediate Nozzle, Orange
6	102-2928	1	Intermediate Nozzle, Red
6	102-2929	1	Intermediate Nozzle, Beige
6	102-6944	1	Intermediate Nozzle Assy., Red W/ Stream Straightener
6	102-6945	1	Intermediate Nozzle Assy., Gray W/ Stream Straightener
6	102-6883	1	Intermediate Nozzle, Brown
7	102-6937	1	Nozzle Assy. Inner, Yellow Nozzle W/ Yellow Helical Restrictor
8	102-4335	1	Plug, Nozzle
9	102-5978	1	O-Ring, Nozzle Housing
10	102-5597	1	Nozzle Housing Assy.
11	363-4104	1	O-Ring, Main Nozzle
12	102-0725	1	Nozzle, Main, #51, Yellow
12	102-7001	1	Nozzle, Main, #52, Blue
12	102-0727	1	Nozzle, Main, #53, Brown
12	102-7002	1	Nozzle, Main, #54, Orange
12	102-6908	1	Nozzle, Main, #35, Green
12	102-6935	1	Nozzle, Main, #56, Gray
12	102-6936	1	Nozzle, Main, #57, Black
12	102-6909	1	Nozzle, Main, #58, Red
12	102-4259	1	Nozzle, Main, #59, Beige
13	118-0780	1	Snap Ring, Riser
14	118-0774	1	Retainer, Rb900
15	364-0576	1	O-Ring, Rb900
16	102-0134	1	Retainer, Seal
17	363-4102	1	O-Ring, Paraffin As-568 232
18	118-0954	1	Riser Hold-Up Tool, Red
19	102-0151	1	Spring, Return
20	118-0776	1	Ratchet Ring, Rb900
21	363-4167	1	O-Ring, Nozzle Base
22	118-1082	1	Riser Assy., Dt54Rb
23	102-4503	1	Drive Assembly, 12-Pack
24	102-6929	1	Stator, Low Flow, High Velocity, Blue (Use W/ #51-54 Nozzles)
24	102-1940	1	Stator Assembly, Medium Flow, White (Use W/ #55-58 Nozzles)
24	102-1941	1	Stator Assembly, High-Flow, White (Use W/ #59 Nozzle)
25	102-1715	1	Screen, Riser
	YARDMARKYEL	1	Yardage Marker, Yellow (10-Sheets Per Pack) ●■
	YARDMARKLAV	1	Yardage Marker, Lavender (For Non-Potable Water Applications) ●■
	118-1521	1	Main Nozzle Adapter ●■
	118-0976	1	Cap, Blank ●■
	118-0977	1	Cap, Blank, Effluent ●■
	995-99	1	Nut Driver, 5/8" (For Main Nozzle) ●■
	995-105	1	Nut Driver, 5/16" (For Inner & Intermediate Nozzles And Plugs) ●■
	995-83	1	Multi-Purpose Tool ●■
	995-82	1	Adjustment Tool, 3/32" (T-Handle Hex Wrench) ●■

● SERVICE ITEMS

■ Not illustrated

FLX55 Ribless Body Conversion w/ Dual Trajectory

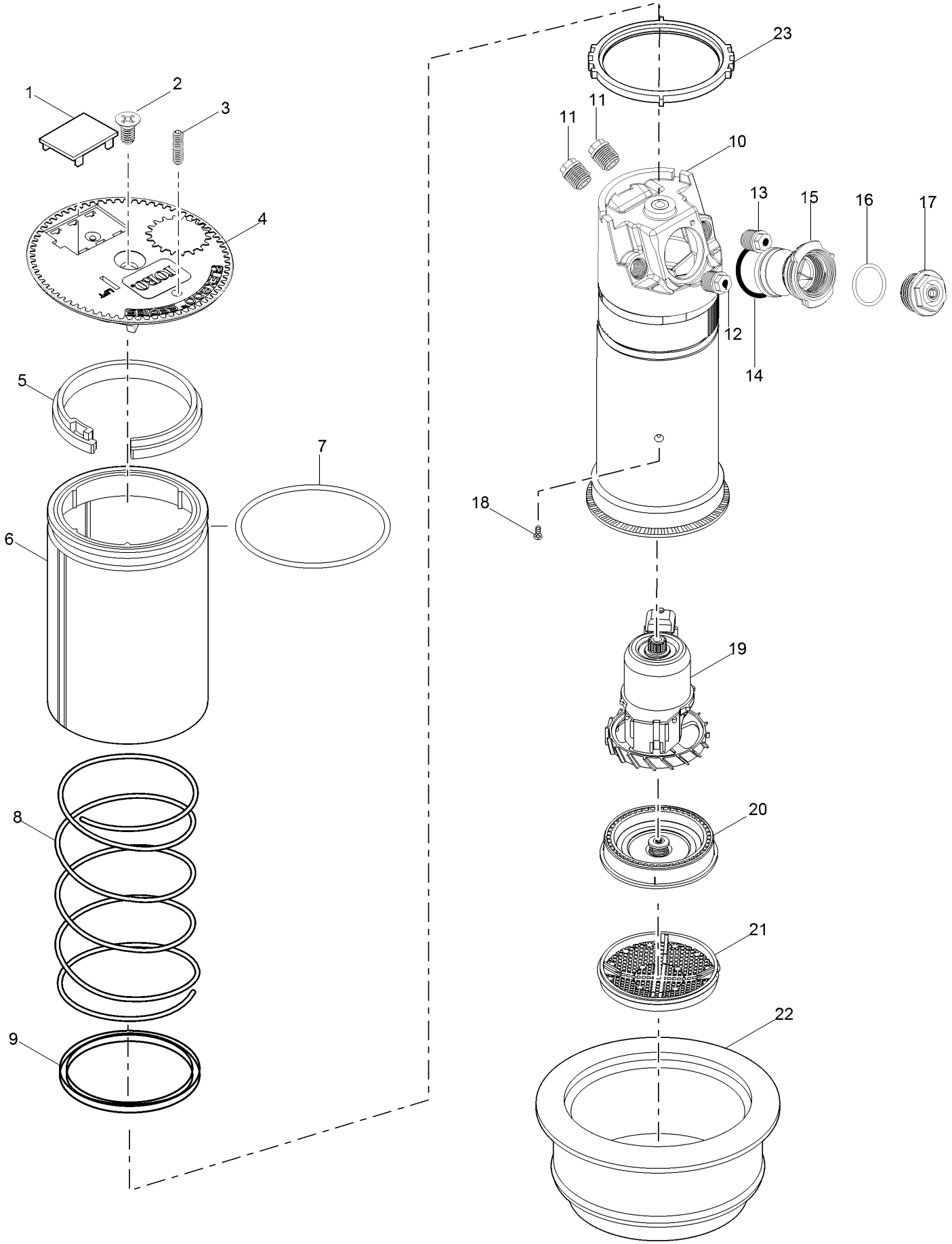

FLX55 Ribless Body Conversion w/ Dual Trajectory (continued)

Ref.	Part Number	Qty.	Description
1	89-1589	1	Plug, Cap (Black)
1	118-1103	1	Plug, Cap (Lavender)
2	102-6138	1	Screw, Cap, Black
3	363-4839	1	Radius Reduction Screw
4	118-6922	1	Cap, Black
4	118-6923	1	Cap, Effluent
5	35-6119	1	Snap Ring, Riser
6	89-7568	1	Sleeve, Retainer, O-Ring, Conversion
7	363-4103	1	O-Ring, Body
8	102-0151	1	Spring, Return
9	89-7569	1	Seal, Riser
10	118-1079	1	Riser Assembly
11	102-4335	2	Plug, Nozzle
12	102-5670	1	Nozzle Assy. Inner, Yellow W/ White Helical Restrictor (Used W/ #1-5 Mains)
12	102-6531	1	Nozzle Assy., Inner, Green W/ White Helical Restrictor (Used W/ #6-9 Mains)
13	102-5671	1	Intermediate Nozzle Assy., Brown W/ Stream Straightener (Used W/ #1 Main)
13	102-6884	1	Intermediate Nozzle, Yellow (Used W/ #2-4 Mains)
13	102-6885	1	Intermediate Nozzle, Green (Used W/ #5-9 Mains)
14	102-5978	1	O-Ring, Nozzle Housing
15	102-5597	1	Nozzle Housing Assy. (Includes Item 14)
16	363-4978	1	O-Ring, Main Nozzle
17	102-6906	1	Nozzle, Main, #51, Yellow
17	102-0726	1	Nozzle, Main, #52, Blue
17	102-6907	1	Nozzle, Main, #53, Brown
17	102-0728	1	Nozzle, Main, #54, Orange
17	102-6955	1	Nozzle, Main, #55, Green
17	102-6935	1	Nozzle, Main, #56, Gray
17	102-6936	1	Nozzle, Main, #57, Black
17	102-6909	1	Nozzle, Main, #58, Red
17	102-4259	1	Nozzle, Main, #59, Beige
18	363-4236	1	Screw, Drive
19	102-4504	1	Drive Assy., 12-Pack
20	102-1939	1	Stator Assembly, Low Flow, Yellow (Used W/ #51-54 Nozzles)
20	102-1940	1	Stator Assembly, Medium Flow, White (Used W/ #55-58 Nozzles)
20	102-1941	1	Stator Assembly, High-Flow, White (Used W/ #59 Nozzle)

Ref.	Part Number	Qty.	Description
21	102-1715	1	Screen, Riser
22	102-0950	1	Adapter, Conversion
23	102-2619	1	Ratchet Ring
	102-5674		Cap, Blank ● ▲
	102-5675		Cap, Blank, Effluent ● ▲
	118-1521	1	Main Nozzle Adapter ● ▲
	YARDMARKYEL	1	Yardage Marker, Yellow (10-Sheets Per Pack) ● ▲
	YARDMARKLAV	1	Yardage Marker, Lavender (For Non-Potable Water Applications) ● ▲
	FLX55-5154R	1	Conversion, Part & Full Circle, W/ #51-54 Nozzles For Ribless Bodies ● ▲
	FLX55-5154RE	1	Conversion, Part & Full Circle, W/ #51-54 Nozzles & Effluent Cap For Ribless Bodies ● ▲
	FLX55-5558R	1	Conversion, Part & Full Circle, W/ #55-58 Nozzles For Ribless Bodies ● ▲
	FLX55-5558RE	1	Conversion, Part & Full Circle, W/ #55-58 Nozzles & Effluent Cap For Ribless Bodies ● ▲
	FLX55-59R	1	Conversion, Part & Full Circle, W/ #59 Nozzle For Ribless Bodies ● ▲
	FLX55-59RE	1	Conversion, Part & Full Circle, W/ #59 Nozzle & Effluent Cap For Ribless Bodies ● ▲
	995-09	1	Valve Removal Tool ■ ▲
	995-101	1	Valve Insertion Tool ■ ▲
	995-15		Selector Tool (Flag Key) ■ ▲
	995-99		Nut Driver, 5/8" (For Main Nozzle) ■ ▲
	995-105		Nut Driver, 5/16" (For Inner & Intermediate Nozzles And Plugs) ■ ▲
	995-83		Multi-Purpose Tool ■ ▲
	995-85		Riser Removal Tool ■ ▲
	995-100		Valve Snap Ring Pliers With Screen Remover ■ ▲
	995-102	1	Riser Hold-Up Tool, Universal ■ ▲
	118-0954	1	Riser Hold-Up Tool, Red ● ▲
	995-82	1	Adjustment Tool, 3/32 ● ▲

● SERVICE ITEMS
▲ Not illustrated

■ SERVICE TOOLS

FLX55 Series Golf Sprinkler w/ Dual Trajectory

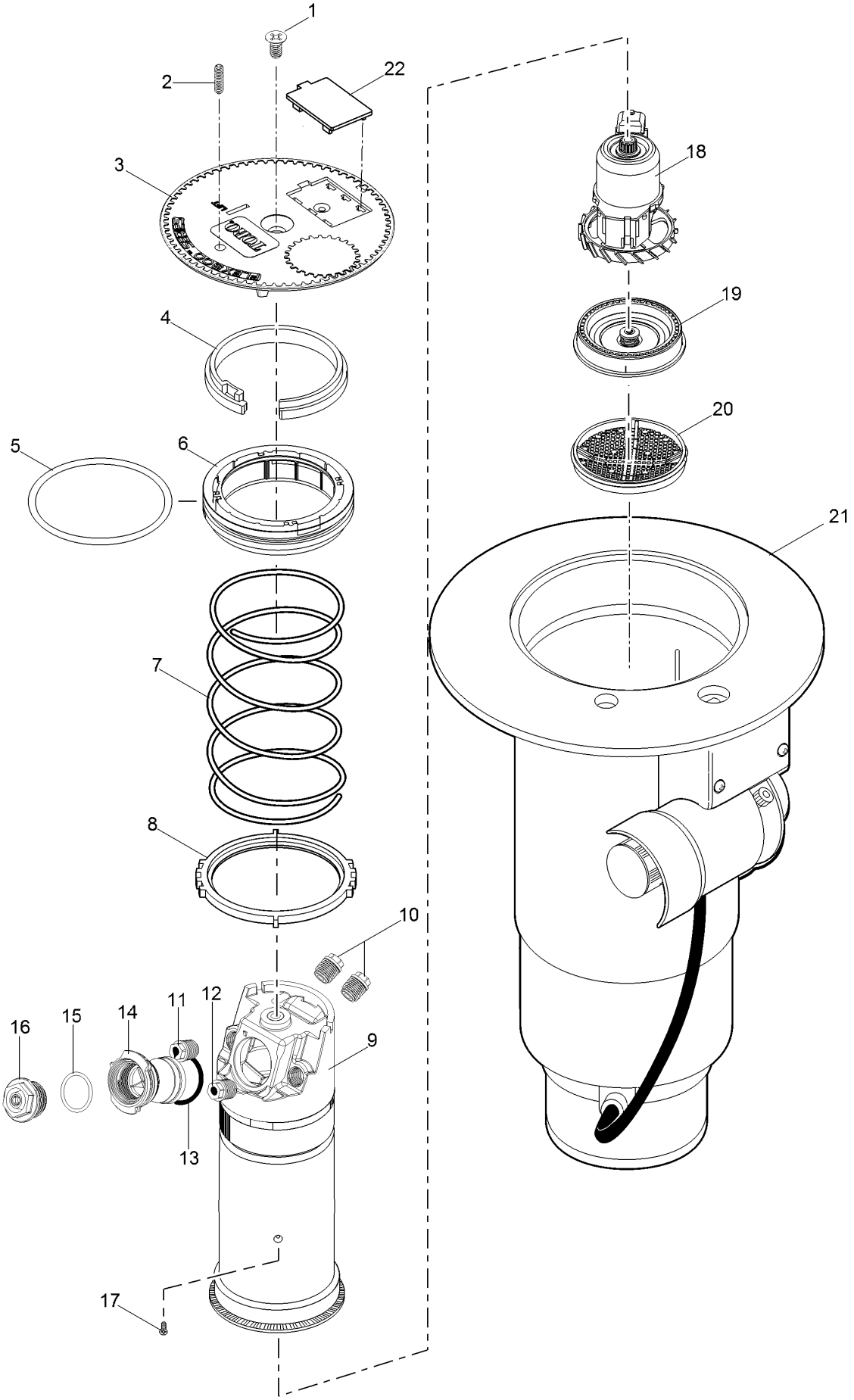

FLX55 Series Golf Sprinkler w/ Dual Trajectory (continued)

Ref.	Part Number	Qty.	Description
1	102-6138	1	Screw, Cap, Black
2	363-4839	1	Radius Reduction Screw
3	118-6922	1	Cap, Black
3	118-6923	1	Cap, Effluent
4	35-6119	1	Snap Ring, Riser
5	363-4103	1	O-Ring, Body
6	102-0136	1	Retainer, Seal, 1.5"
7	102-0151	1	Spring, Return
8	102-4967	1	Ratchet Ring, 1.5"
9	118-1079	1	Riser Assembly
10	102-4335	2	Plug, Nozzle
11	102-5670	1	Nozzle Assy. Inner, Yellow W/ White Helical Restrictor (Used With #51-55 Main Nozzles)
11	102-6531	1	Nozzle Assy., Inner, Green W/ White Helical Restrictor (Used With #56-59 Main Nozzles)
12	102-5671	1	Intermediate Nozzle Assy., Brown W/ Stream Straightener (Used With #51 Main Nozzle)
12	102-6884	1	Intermediate Nozzle, Yellow (Used With #52-54 Main Nozzles)
12	102-6885	1	Intermediate Nozzle, Green (Used With #55-59 Main Nozzles)
13	102-5978	1	O-Ring, Nozzle Housing
14	102-5597	1	Nozzle Housing Assy.
15	363-4978	1	O-Ring, Main Nozzle
16	102-6906	1	Nozzle, Main, #51, Yellow
16	102-0726	1	Nozzle, Main, #52, Blue
16	102-6907	1	Nozzle, Main, #53, Brown
16	102-0728	1	Nozzle, Main, #54, Orange
16	102-6955	1	Nozzle, Main, #55, Green
16	102-6935	1	Nozzle, Main, #56, Gray
16	102-6936	1	Nozzle, Main, #57, Black
16	102-6909	1	Nozzle, Main, #58, Red
16	102-4259	1	Nozzle, Main, #59, Beige
17	363-4236	1	Screw, Drive
18	102-4504	1	Drive Assy., 12-Pack
19	102-1939	1	Stator Assembly, Low Flow, Yellow (Used With #51-54 Main Nozzles)
19	102-1940	1	Stator Assembly, Medium Flow, White (Used With #55-58 Main Nozzles)
19	102-1941	1	Stator Assembly, High-Flow, White (Used With #59 Main Nozzle)
20	102-1715	1	Screen, Riser
21		1	Body Assembly (See Golf Body Assembly Section.) ▲
22	89-1589	1	Plug, Cap (Black)
22	118-1103	1	Plug, Cap (Lavender)
	118-1521	1	Main Nozzle Adapter ■●
	995-09	1	Valve Removal Tool ■●
	995-101	1	Valve Insertion Tool ■●
	995-15	1	Selector Tool (Flag Key) ■●
	995-99	1	Nut Driver, 5/8" (For Main Nozzle) ■●
	995-105	1	Nut Driver, 5/16" (For Inner & Intermediate Nozzles And Plugs) ■●
	995-83	1	Multi-Purpose Tool ■●
	995-85	1	Riser Removal Tool ■●
	995-100	1	Valve Snap Ring Pliers With Screen Remover ■●
	995-102	1	Riser Hold-Up Tool, Universal ■●
	118-0954	1	Riser Hold-Up Tool, Red ■●
	102-5674	1	Cap, Blank ■●
	102-5675	1	Cap, Blank, Effluent ■●
	995-82	1	Adjustment Tool, 3/32 ■●

● SERVICE ITEMS
▲ Not serviced separately
■ Not illustrated

FLX55RB R Series Conversion w/ Dual Trajectory

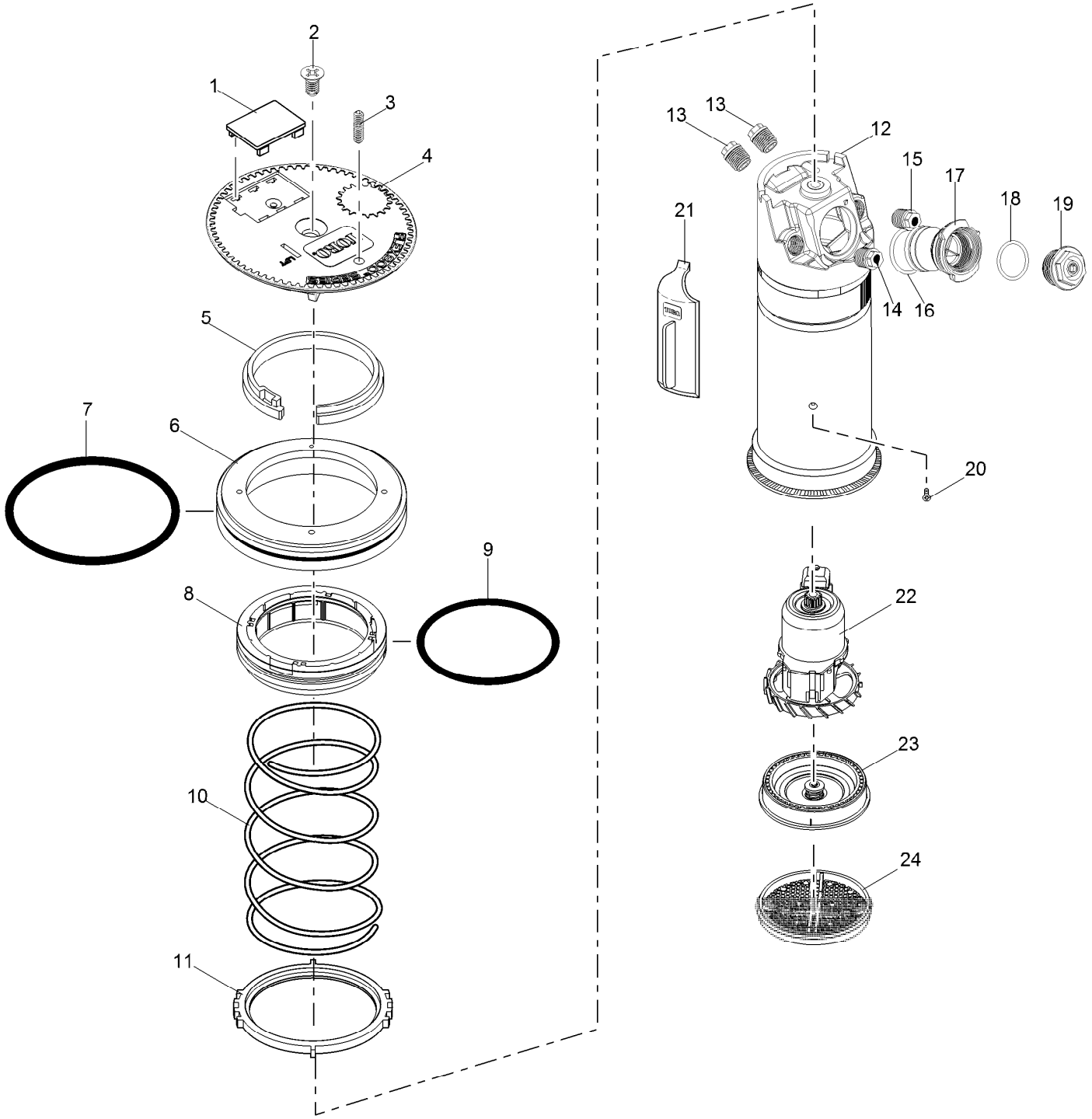

FLX55RB R Series Conversion w/ Dual Trajectory (continued)

Ref.	Part Number	Qty.	Description
1	89-1589	1	Plug, Cap (Black)
1	118-1103	1	Plug, Cap (Lavender)
2	102-6138	1	Screw, Cap, Black
3	363-4839	1	Radius Reduction Screw
4	118-4221	1	Cap, Flx55Rb
5	118-0780	1	Snap Ring, Riser
6	118-0774	1	Retainer, Rb900
7	364-0576	1	O-Ring, Rb900
8	102-0134	1	Retainer, Seal
9	363-4102	1	O-Ring, Paraffin As-568 232
10	102-0151	1	Spring, Return
11	118-0776	1	Ratchet Ring, Rb900
12	118-1079	1	Riser Assembly
13	102-4335	2	Plug, Nozzle
14	102-5670	1	Nozzle Assy. Inner, Yellow W/ White Helical Restrictor
14	102-6531	1	Nozzle Assy., Inner, Green W/ White Helical Restrictor
15	102-6884	1	Intermediate Nozzle, Yellow
15	102-6885	1	Intermediate Nozzle, Green
15	102-5671	1	Intermediate Nozzle Assy., Brown W/ Stream Straightener
16	102-5978	1	O-Ring, Nozzle Housing
17	102-5597	1	Nozzle Housing Assy.
18	363-4104	1	O-Ring, Main Nozzle
19	102-6906	1	Nozzle, Main, #51, Yellow
19	102-0726	1	Nozzle, Main, #52, Blue
19	102-6907	1	Nozzle, Main, #53, Brown
19	102-0728	1	Nozzle, Main, #54, Orange
19	102-6955	1	Nozzle, Main, #55, Green
19	102-6935	1	Nozzle, Main, #56, Gray
19	102-6936	1	Nozzle, Main, #57, Black
19	102-6909	1	Nozzle, Main, #58, Red
19	102-4259	1	Nozzle, Main, #59, Beige
20	363-4236	1	Screw, Drive
21	118-0954	1	Riser Hold-Up Tool, Red
22	102-4504	1	Drive Assy., 12-Pack
23	102-1939	1	Stator Assembly, Low Flow, Yellow (Use W/ #51-54 Nozzles)
23	102-1940	1	Stator Assembly, Medium Flow, White (Use W/ #55-58 Nozzles)
23	102-1941	1	Stator Assembly, High-Flow, White (Use W/ #59 Nozzle)
24	102-1715	1	Screen, Riser
	102-2208	1	Nozzle, Main, #30, Blank, White ●■
	118-0976	1	Cap, Blank ●■
	118-0977	1	Cap, Blank, Effluent ●■
	995-99	1	Nut Driver, 5/8" (For Main Nozzle) ●■
	995-105	1	Nut Driver, 5/16" (For Inner & Intermediate Nozzles And Plugs) ●■
	995-83	1	Multi-Purpose Tool ●■
	995-82	1	Adjustment Tool, 3/32" (T-Handle Hex Wrench) ●■

● SERVICE ITEMS

■ Not illustrated

FLX55-6 Ribless Body Conv w/ 24-Pos TruJectory

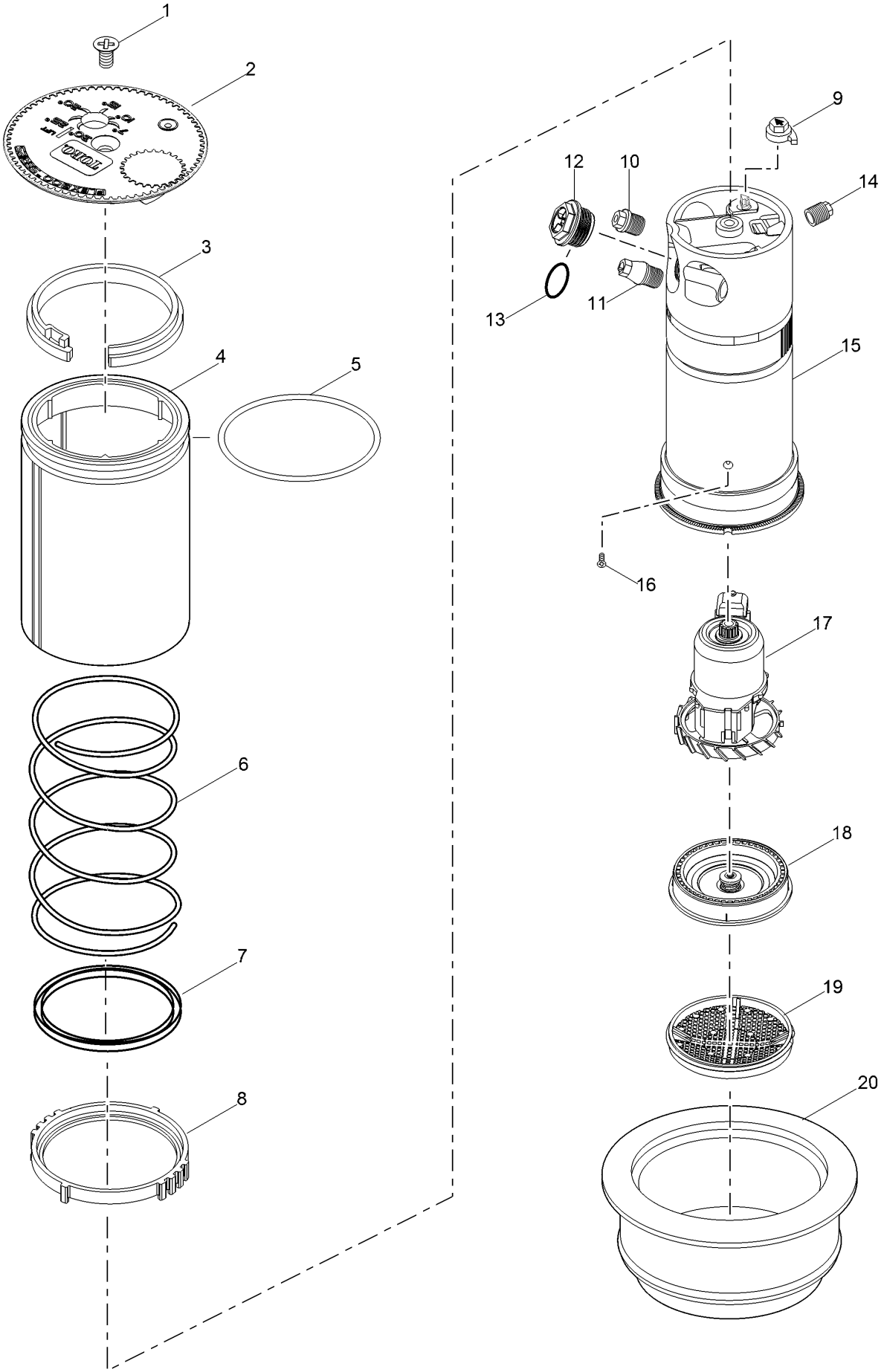

FLX55-6 Ribless Body Conv w/ 24-Pos TruJectory (continued)

Ref.	Part Number	Qty.	Description
1	102-6138	1	Screw, Cap, Black
2	118-6924	1	Cap, Black
2	118-6925	1	Cap, Effluent
3	35-6119	1	Snap Ring, Riser
4	89-7568	1	Sleeve, Retainer, O-Ring, Conversion
5	363-4103	1	O-Ring, Body
6	102-0151	1	Spring, Return
7	89-7569	1	Seal, Riser
8	102-2619	1	Ratchet Ring, 1"
9	102-5971	1	Trajectory Adjuster
10	102-2925	1	Intermediate Nozzle, Blue (Use W/ #1, #5, #6, #8 & #9 Mains)
10	102-2926	1	Intermediate Nozzle, Orange (Use W/ #3, #4 & #7 Mains)
10	102-2928	1	Intermediate Nozzle, Red (Use W/ #2 Main)
11	102-2910	1	Nozzle Assembly, Inner
12	102-4587	1	Nozzle, Main, #51, Yellow
12	102-4588	1	Nozzle, Main, #52, Blue
12	102-4589	1	Nozzle, Main, #53, Brown
12	102-0728	1	Nozzle, Main, #54, Orange
12	102-0729	1	Nozzle, Main, #55, Green
12	102-0730	1	Nozzle, Main, #56, Gray
12	102-4261	1	Nozzle, Main, #57, Black
12	102-4260	1	Nozzle, Main, #58, Red
12	102-4259	1	Nozzle, Main, #59, Beige
13	363-4978	1	O-Ring, Main Nozzle
14	102-4335	1	Plug, Nozzle
15	102-2892	1	Riser Assembly
16	363-4236	1	Screw, Drive
17	102-4504	1	Drive Assy., 12-Pack
18	102-1939	1	Stator Assembly, Low Flow, Yellow (Use W/ #51-54 Nozzles)
18	102-1940	1	Stator Assembly, Medium Flow, White (Use W/ #55-58 Nozzles)
18	102-1941	1	Stator Assembly, High-Flow, White (Use W/ #59 Nozzle)
19	102-1715	1	Screen, Riser
20	102-0950	1	Adapter, Conversion
	118-1521	1	Main Nozzle Adapter ● ▲
	102-4337		Stream Straightener, Intermediate Nozzle ● ▲
	102-2041		Restrictor, Yellow, Inner Nozzle ● ▲
	102-2497		Cap, Blank, 855S ● ▲
	102-2498		Cap, Blank, Effluent, 855S ● ▲
	995-09		Valve Removal Tool ■ ▲
	995-101		Valve Insertion Tool ■ ▲
	995-15		Selector Tool (Flag Key) ■ ▲
	995-99		Nut Driver, 5/8" (For Main Nozzle) ■ ▲
	995-105		Nut Driver, 5/16" (For Inner & Intermediate Nozzles And Plugs) ■ ▲
	995-83		Multi-Purpose Tool ■ ▲
	995-85		Riser Removal Tool ■ ▲
	995-100		Valve Snap Ring Pliers With Screen Remover ■ ▲
	995-102		Riser Hold-Up Tool, Universal ■ ▲
	118-0954	1	Riser Hold-Up Tool, Red ■ ▲

● SERVICE ITEMS
▲ Not illustrated

■ SERVICE TOOLS

FLX55-6 Series Golf Sprinkler w/ 24-Pos TruJectory

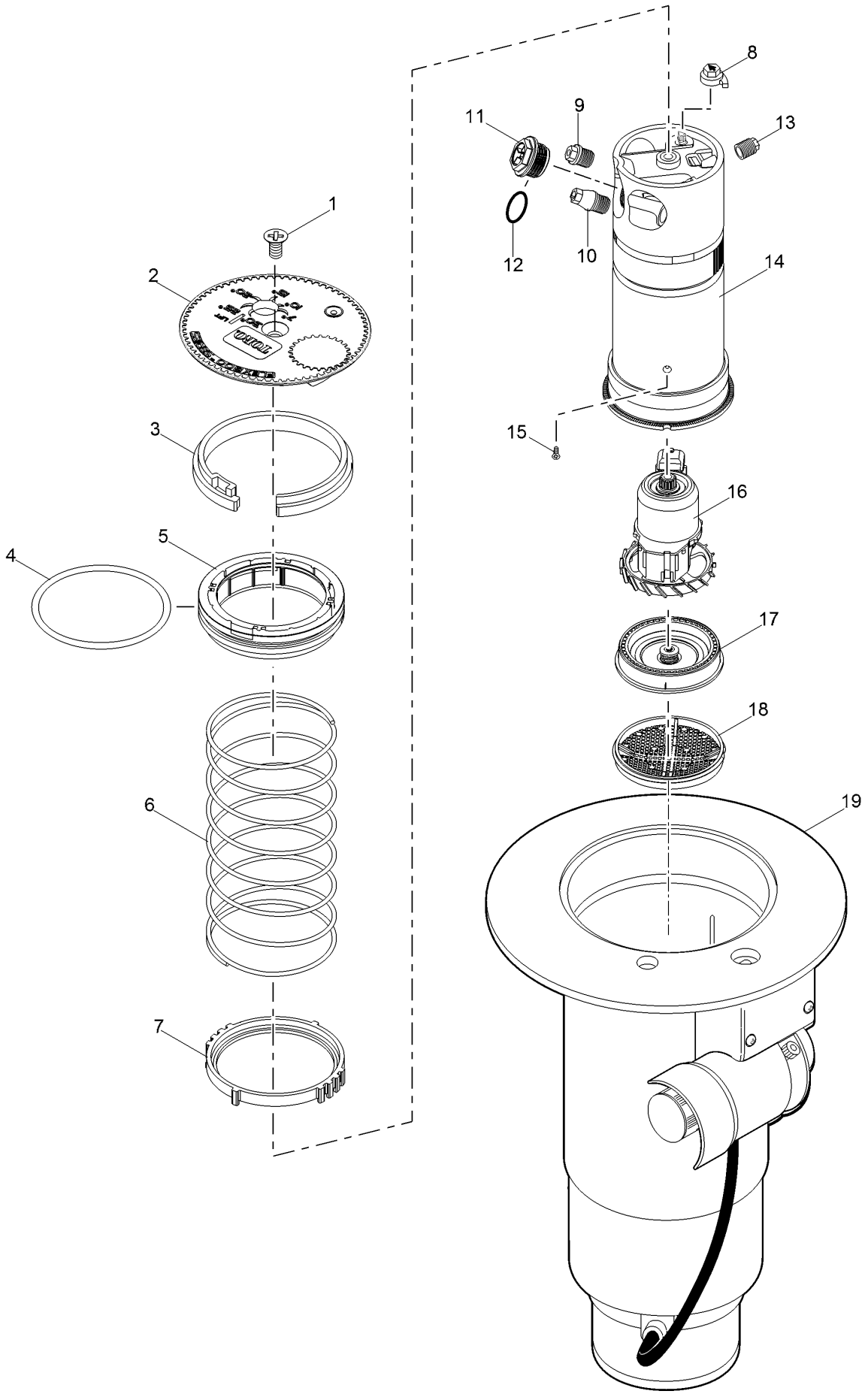

FLX55-6 Series Golf Sprinkler w/ 24-Pos TruJectory (continued)

Ref.	Part Number	Qty.	Description
1	102-6138	1	Screw, Cap, Black
2	118-6924	1	Cap, Black
2	118-6925	1	Cap, Effluent
3	35-6119	1	Snap Ring, Riser
4	363-4103	1	O-Ring, Body
5	102-0136	1	Retainer, Seal, 1.5"
6	102-0151	1	Spring, Return
7	102-4967	1	Ratchet Ring, 1.5"
8	102-5971	1	Trajectory Adjuster
9	102-2925	1	Intermediate Nozzle, Blue (Used With #51, #55, #56, #58 And #59 Main Nozzles)
9	102-2926	1	Intermediate Nozzle, Orange (Used With #53, #54 And #57 Main Nozzles)
9	102-2928	1	Intermediate Nozzle, Red (Used With #52 Main Nozzle)
10	102-2910	1	Nozzle Assembly, Inner
11	102-4587	1	Nozzle, Main, #51, Yellow
11	102-4588	1	Nozzle, Main, #52, Blue
11	102-4589	1	Nozzle, Main, #53, Brown
11	102-0728	1	Nozzle, Main, #54, Orange
11	102-0729	1	Nozzle, Main, #55, Green
11	102-0730	1	Nozzle, Main, #56, Gray
11	102-4261	1	Nozzle, Main, #57, Black
11	102-4260	1	Nozzle, Main, #58, Red
11	102-4259	1	Nozzle, Main, #59, Beige
12	363-4978	1	O-Ring, Main Nozzle
13	102-4335	1	Plug, Nozzle
14	102-2892	1	Riser Assembly
15	363-4236	1	Screw, Drive
16	102-4504	1	Drive Assy., 12-Pack
17	102-1939	1	Stator Assembly, Low Flow, Yellow (Use W/ #51-54 Nozzles)
17	102-1940	1	Stator Assembly, Medium Flow, White (Used With #55-58 Nozzles)
17	102-1941	1	Stator Assembly, High-Flow, White (Used With #59 Nozzle)
18	102-1715	1	Screen, Riser
19		1	Body Assembly (See Golf Body Assembly Section.) ▲
	102-4337	1	Stream Straightener, Intermediate Nozzle ■ ●
	102-2041	1	Restrictor, Yellow, Inner Nozzle ■ ●
	118-1521	1	Main Nozzle Adapter ■ ●
	995-09	1	Valve Removal Tool ■ ●
	995-101	1	Valve Insertion Tool ■ ●
	995-15	1	Selector Tool (Flag Key) ■ ●
	995-99	1	Nut Driver, 5/8" (For Main Nozzle) ■ ●
	995-105	1	Nut Driver, 5/16" (For Inner & Intermediate Nozzles And Plugs) ■ ●
	995-83	1	Multi-Purpose Tool ■ ●
	995-85	1	Riser Removal Tool ■ ●
	995-100	1	Valve Snap Ring Pliers With Screen Remover ■ ●
	995-102	1	Riser Hold-Up Tool, Universal ■ ●
	118-0954	1	Riser Hold-Up Tool, Red ■ ●

● SERVICE ITEMS
▲ Not serviced separately
■ Not illustrated

FLX55-6RB R Series Conv w/ 24-Pos TruJectory

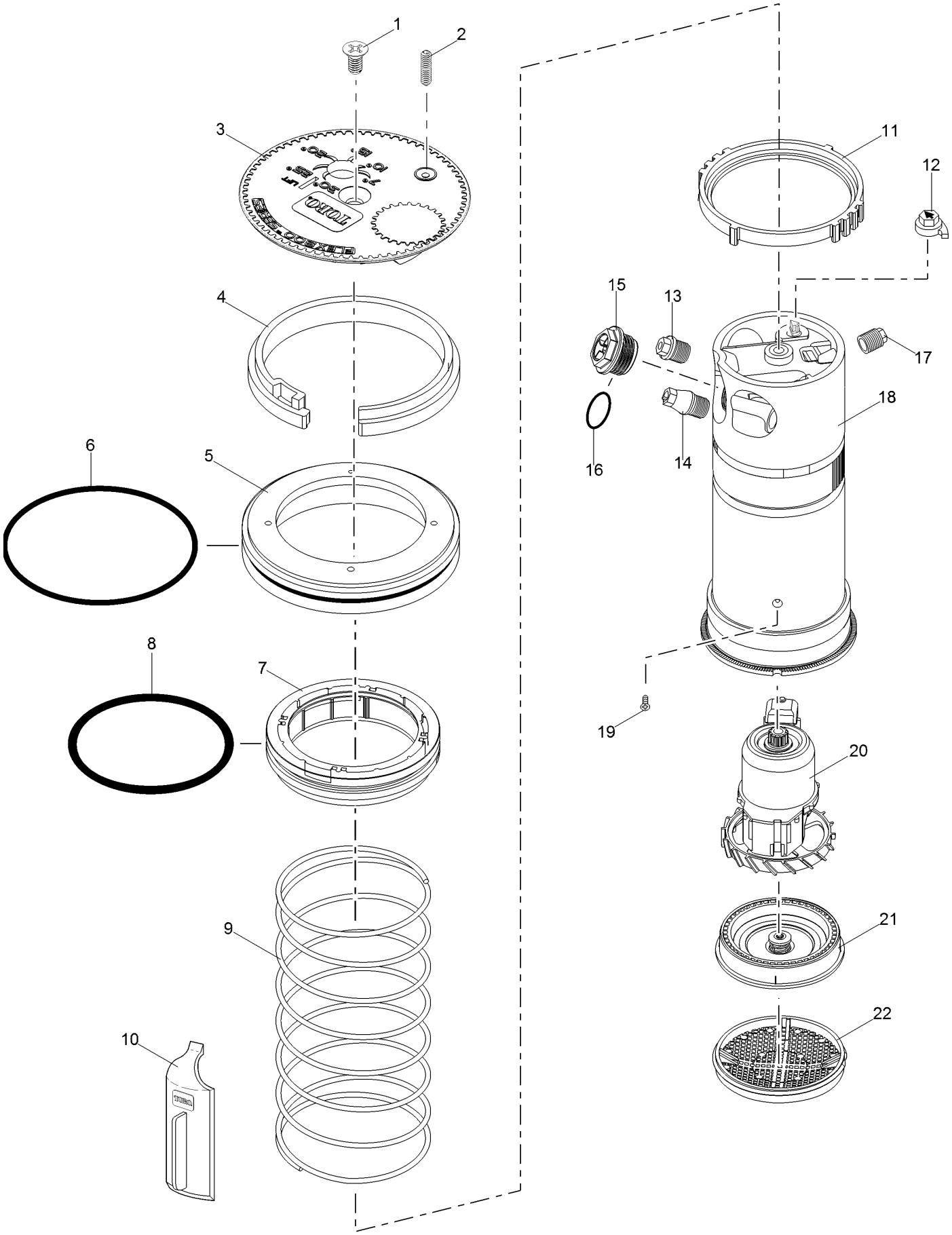

FLX55-6RB R Series Conv w/ 24-Pos TruJectory (continued)

Ref.	Part Number	Qty.	Description
1	102-6138	1	Screw, Cap, Black
2	363-4839	1	Radius Reduction Screw
3	118-4222	1	Cap, Flx55-6Rb
4	118-0780	1	Snap Ring, Riser
5	118-0774	1	Retainer, Rb900
6	364-0576	1	O-Ring, Rb900
7	102-0134	1	Retainer, Seal
8	363-4102	1	O-Ring, Paraffin As-568 232
9	102-0151	1	Spring, Return
10	118-0954	1	Riser Hold-Up Tool, Red
11	118-0776	1	Ratchet Ring, Rb900
12	102-5971	1	Trajectory Adjuster
13	102-2925	1	Intermediate Nozzle, Blue
13	102-2926	1	Intermediate Nozzle, Orange
13	102-2928	1	Intermediate Nozzle, Red
14	102-2910	1	Nozzle Assembly, Inner
15	102-4587	1	Nozzle, Main, #51, Yellow
15	102-4588	1	Nozzle, Main, #52, Blue
15	102-4589	1	Nozzle, Main, #53, Brown
15	102-0728	1	Nozzle, Main, #54, Orange
15	102-0729	1	Nozzle, Main, #55, Green
15	102-0730	1	Nozzle, Main, #56, Gray
15	102-4261	1	Nozzle, Main, #57, Black
15	102-4260	1	Nozzle, Main, #58, Red
15	102-4259	1	Nozzle, Main, #59, Beige
15	118-1521	1	Main Nozzle Adapter
16	363-4104	1	O-Ring, Main Nozzle
17	102-4335	1	Plug, Nozzle
18	102-2892	1	Riser Assembly
19	363-4236	1	Screw, Drive
20	102-4504	1	Drive Assy., 12-Pack
21	102-1939	1	Stator Assembly, Low Flow, Yellow (Use W/ #51-54 Nozzles)
21	102-1940	1	Stator Assembly, Medium Flow, White (Use W/ #55-58 Nozzles)
21	102-1941	1	Stator Assembly, High-Flow, White (Use W/ #59 Nozzle)
22	102-1715	1	Screen, Riser
	YARDMARKYEL	1	Yardage Marker, Yellow (10-Sheets Per Pack) ●■
	YARDMARKLAV	1	Yardage Marker, Lavender (For Non-Potable Water Applications) ●■
	118-0974	1	Cap, Blank ●■
	118-0975	1	Cap, Blank, Effluent ●■
	995-99	1	Nut Driver, 5/8" ●■
	995-105	1	Nut Driver, 5/16" ●■
	995-83	1	Multi-Purpose Tool ●■
	995-82	1	Adjustment Tool, 3/32" ●■

● SERVICE ITEMS

■ Not illustrated

INF54 Series Golf Sprinkler w/ Dual Trajectory

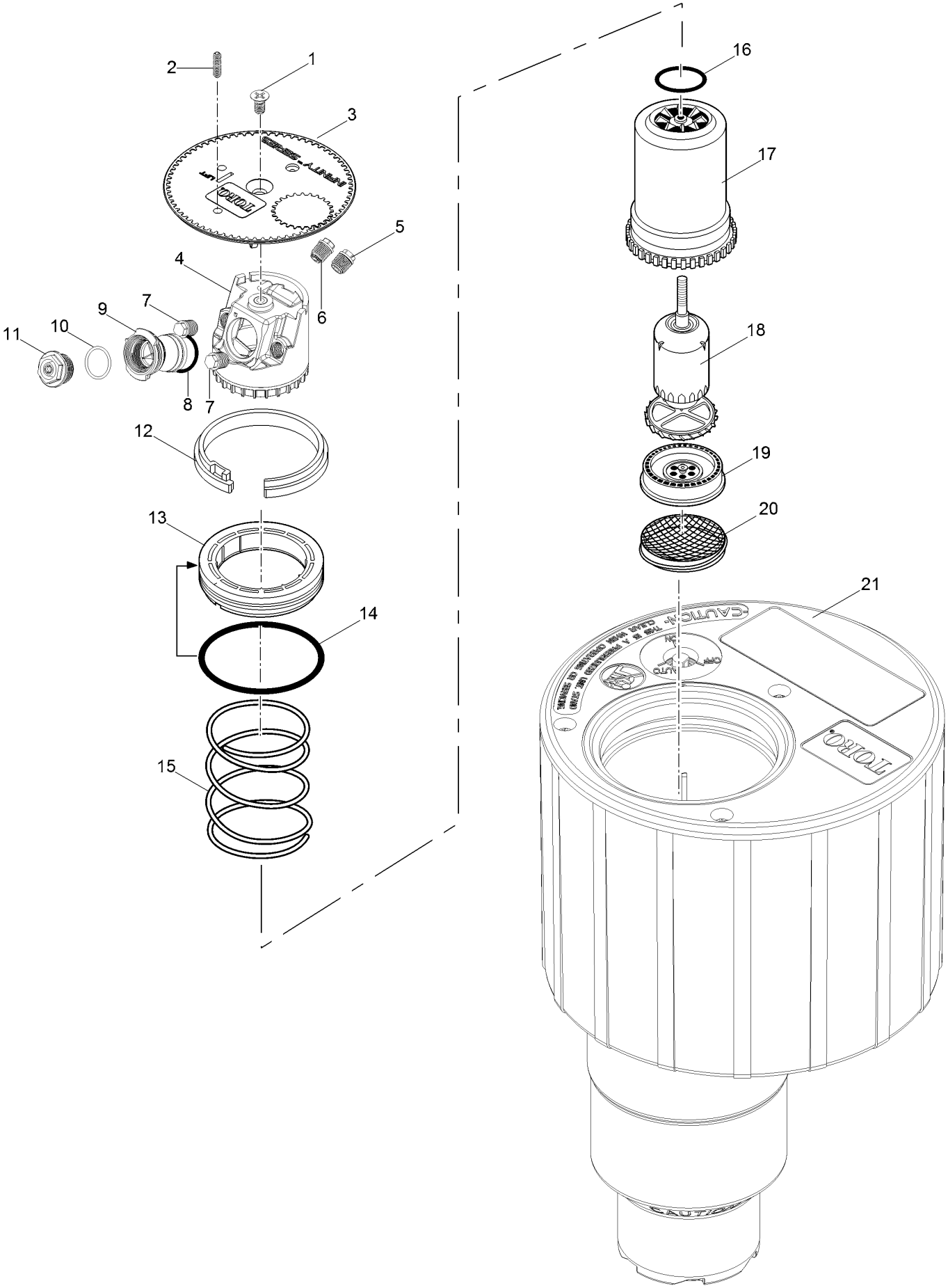

INF54 Series Golf Sprinkler w/ Dual Trajectory (continued)

Ref.	Part Number	Qty.	Description
1	102-0362	1	Screw, Cap
2	363-4839	1	Radius Reduction Screw
3	118-3091	1	Cap, Black
3	118-3095	1	Cap, Effluent
4	102-5837	1	Nozzle Base Assembly
5	102-2925	1	Intermediate Nozzle, Blue (Used With #51 Main Nozzle)
5	102-2926	1	Intermediate Nozzle, Orange (Used With #52 Main Nozzle)
5	102-2928	1	Intermediate Nozzle, Red (Used With #53 Main Nozzle)
5	102-2929	1	Intermediate Nozzle, Beige (Used With #54 And #55 Main Nozzles)
5	102-6944	1	Intermediate Nozzle Assy., Red W/ Stream Straightener (Used With #56 Main Nozzles)
5	102-6945	1	Intermediate Nozzle Assy., Gray W/ Stream Straightener (Used With #57-59 Main Nozzles)
5	102-6883	1	Intermediate Nozzle, Brown (Used With #57 And #58 Main Nozzles, Front)
6	102-6937	1	Nozzle Assy. Inner, Yellow Nozzle W/ Yellow Helical Restrictor
7	102-4335	2	Plug, Nozzle
8	102-5978	1	O-Ring, Nozzle Housing
9	102-5597	1	Nozzle Housing Assy.
10	363-4978	1	O-Ring, Main Nozzle
11	102-0725	1	Nozzle, Main, #51, Yellow
11	102-7001	1	Nozzle, Main, #52, Blue
11	102-0727	1	Nozzle, Main, #53, Brown
11	102-7002	1	Nozzle, Main, #54, Orange
11	102-6908	1	Nozzle, Main, #55, Green
11	102-0730	1	Nozzle, Main, #56, Gray
11	102-4261	1	Nozzle, Main, #57, Black
11	102-4260	1	Nozzle, Main, #58, Red
11	102-4259	1	Nozzle, Main, #59, Beige
12	35-6119	1	Snap Ring, Riser
13	102-0136	1	Retainer, Seal, 1.5"
14	363-4103	1	O-Ring, Body
15	102-0151	1	Spring, Return
16	363-4167	1	O-Ring, Nozzle Base
17	102-0202	1	Riser
18	102-4503	1	Drive Assembly, 12-Pack
19	102-6929	1	Stator, Low Flow, High Velocity, Blue (Used With #51-54 Main Nozzles)
19	102-1940	1	Stator Assembly, Medium Flow, White (Use With #55-58 Main Nozzles)
19	102-1941	1	Stator Assembly, High-Flow, White (Used With #59 Main Nozzle)
20	102-1715	1	Screen, Riser
21		1	Body Assembly (See Golf Sprinkler Body Assembly Section) ▲
	118-1521	1	Main Nozzle Adapter ■●
	995-09	1	Valve Removal Tool ■●
	118-1843	1	Valve Insertion Tool ■●
	995-15	1	Selector Tool (Flag Key) ■●
	995-99	1	Nut Driver, 5/8" (For Main Nozzle) ■●
	995-105	1	Nut Driver, 5/16" (For Inner & Intermediate Nozzles And Plugs) ■●
	995-83	1	Multi-Purpose Tool ■●
	995-85	1	Riser Removal Tool ■●
	995-100	1	Valve Snap Ring Pliers With Screen Remover ■●
	995-102	1	Riser Hold-Up Tool, Universal ■●
	118-0954	1	Riser Hold-Up Tool, Red ■●

● SERVICE ITEMS
▲ Not serviced separately
■ Not illustrated

INF55 Series Golf Sprinkler w/ Dual Trajectory

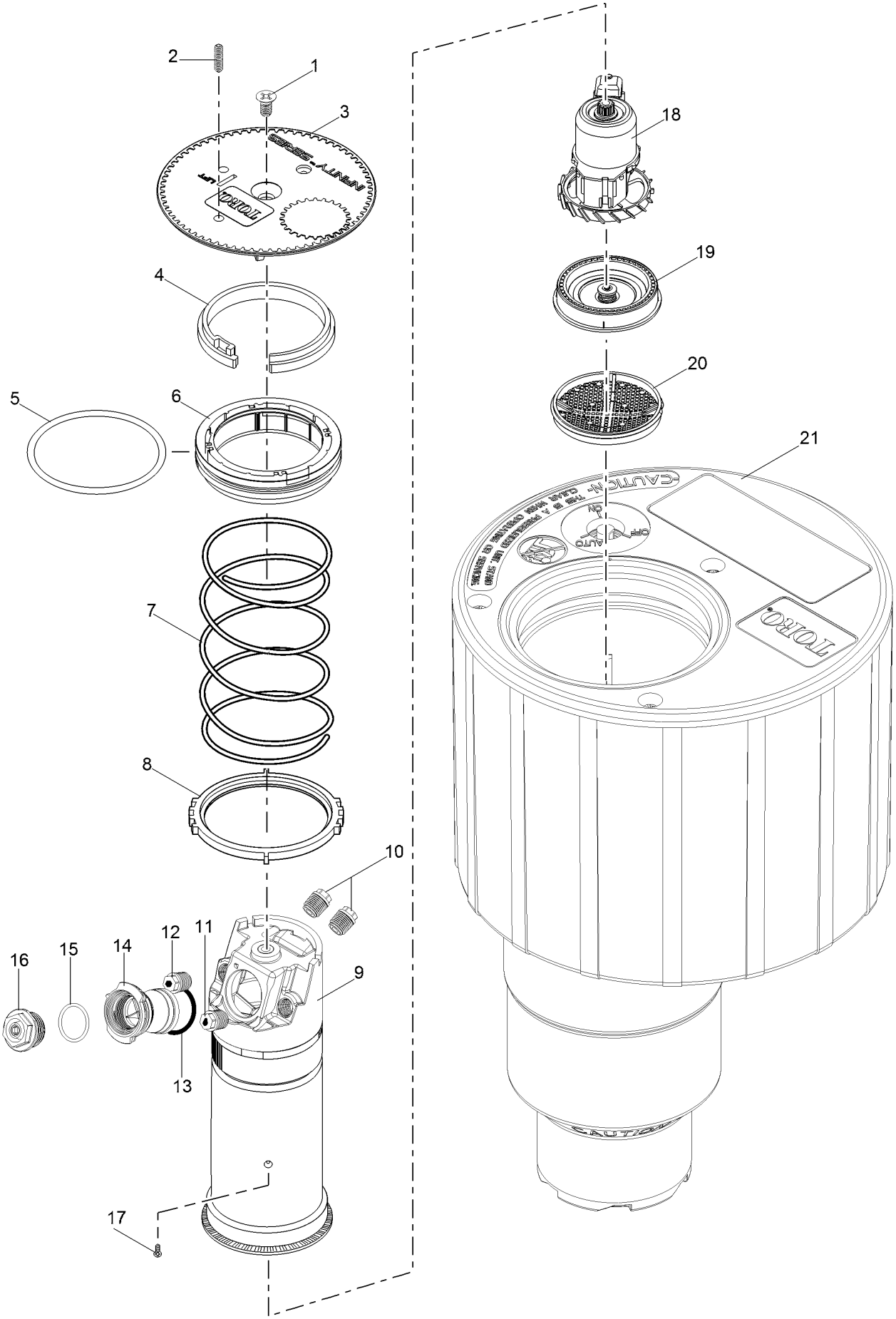

INF55 Series Golf Sprinkler w/ Dual Trajectory (continued)

Ref.	Part Number	Qty.	Description
1	102-6138	1	Screw, Cap, Black
2	363-4839	1	Radius Reduction Screw
3	118-3091	1	Cap, Black
3	118-3095	1	Cap, Effluent
4	35-6119	1	Snap Ring, Riser
5	363-4103	1	O-Ring, Body
6	102-0136	1	Retainer, Seal, 1.5"
7	102-0151	1	Spring, Return
8	102-4967	1	Ratchet Ring, 1.5"
9	118-1079	1	Riser Assembly
10	102-4335	2	Plug, Nozzle
11	102-5670	1	Nozzle Assy. Inner, Yellow W/ White Helical Restrictor (Used With #51-55 Main Nozzles)
11	102-6531	1	Nozzle Assy., Inner, Green W/ White Helical Restrictor (Used With #56-59 Main Nozzles)
12	102-5671	1	Intermediate Nozzle Assy., Brown W/ Stream Straightener (Used With #51 Main Nozzle)
12	102-6884	1	Intermediate Nozzle, Yellow (Used With #52-54 Main Nozzles)
12	102-6885	1	Intermediate Nozzle, Green (Used With #55-59 Main Nozzles)
13	102-5978	1	O-Ring, Nozzle Housing
14	102-5597	1	Nozzle Housing Assy.
15	363-4978	1	O-Ring, Main Nozzle
16	102-6906	1	Nozzle, Main, #51, Yellow
16	102-0726	1	Nozzle, Main, #52, Blue
16	102-6907	1	Nozzle, Main, #53, Brown
16	102-0728	1	Nozzle, Main, #54, Orange
16	102-6955	1	Nozzle, Main, #55, Green
16	102-6935	1	Nozzle, Main, #56, Gray
16	102-6936	1	Nozzle, Main, #57, Black
16	102-6909	1	Nozzle, Main, #58, Red
16	102-4259	1	Nozzle, Main, #59, Beige
17	363-4236	1	Screw, Drive
18	102-4504	1	Drive Assy., 12-Pack
19	102-1939	1	Stator Assembly, Low Flow, Yellow (Used With #51-54 Main Nozzles)
19	102-1940	1	Stator Assembly, Medium Flow, White (Used With #55-58 Main Nozzles)
19	102-1941	1	Stator Assembly, High-Flow, White (Used With #59 Main Nozzle)
20	102-1715	1	Screen, Riser
21		1	Body Assembly (See Golf Body Assembly Section.) ▲
	118-1521	1	Main Nozzle Adapter ■●
	995-09	1	Valve Removal Tool ■●
	118-1843	1	Valve Insertion Tool ■●
	995-15	1	Selector Tool (Flag Key) ■●
	995-99	1	Nut Driver, 5/8" (For Main Nozzle) ■●
	995-105	1	Nut Driver, 5/16" (For Inner & Intermediate Nozzles And Plugs) ■●
	995-83	1	Multi-Purpose Tool ■●
	995-85	1	Riser Removal Tool ■●
	995-100	1	Valve Snap Ring Pliers With Screen Remover ■●
	995-102	1	Riser Hold-Up Tool, Universal ■●
	118-0954	1	Riser Hold-Up Tool, Red ■●

● SERVICE ITEMS
▲ Not serviced separately
■ Not illustrated

INF55-6 Series Golf Sprinkler w/ 24-Pos TruJectory

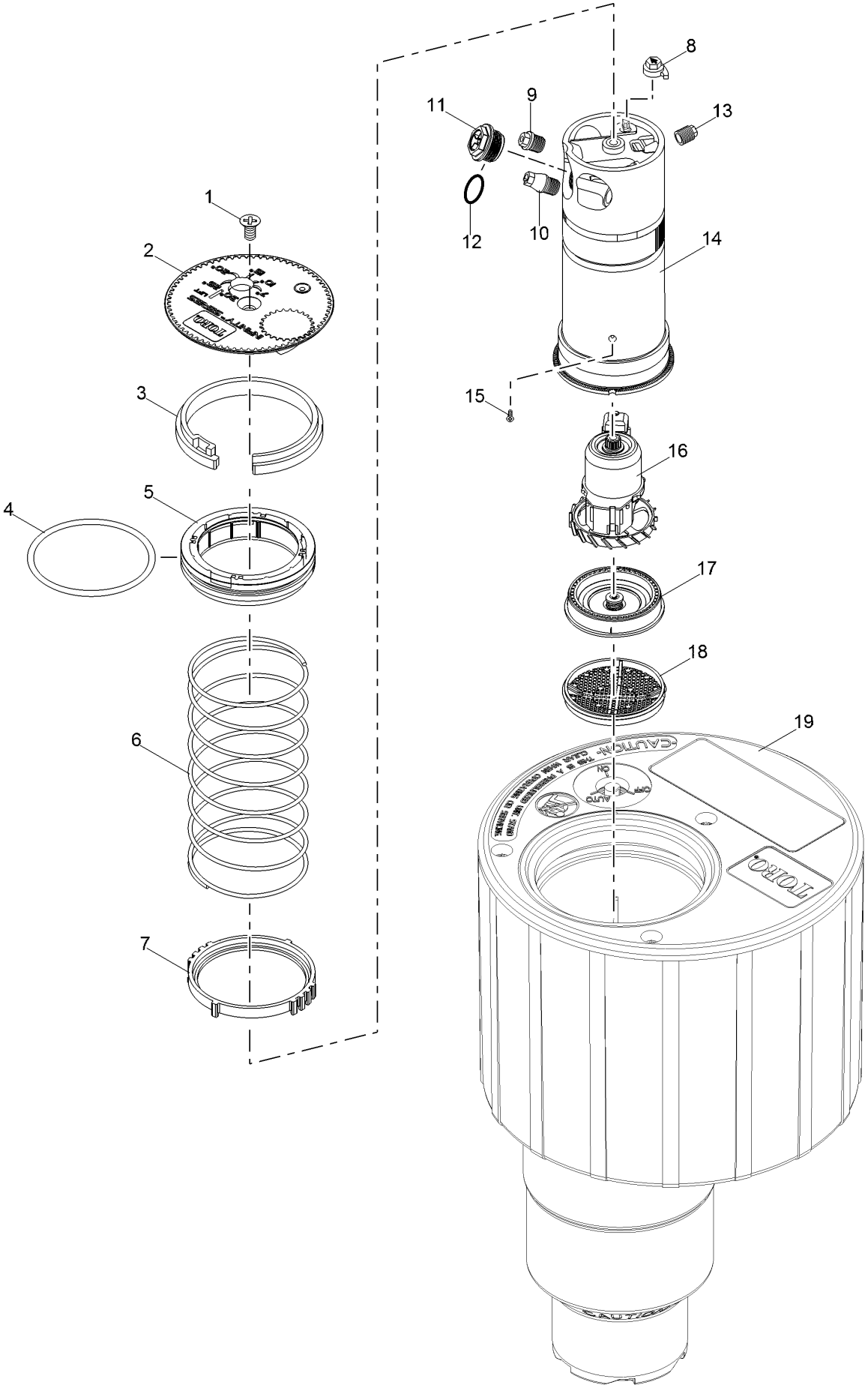

INF55-6 Series Golf Sprinkler w/ 24-Pos TruJectory (continued)

Ref.	Part Number	Qty.	Description
1	102-6138	1	Screw, Cap, Black
2	118-3092	1	Cap, Black
2	118-3096	1	Cap, Effluent
3	35-6119	1	Snap Ring, Riser
4	363-4103	1	O-Ring, Body
5	102-0136	1	Retainer, Seal, 1.5"
6	102-0151	1	Spring, Return
7	102-4967	1	Ratchet Ring, 1.5"
8	102-5971	1	Trajectory Adjuster
9	102-2925	1	Intermediate Nozzle, Blue (Used With #51, #55, #56, #58 And #59 Main Nozzles)
9	102-2926	1	Intermediate Nozzle, Orange (Used With #53, #54 And #57 Main Nozzles)
9	102-2928	1	Intermediate Nozzle, Red (Used With #52 Main Nozzle)
10	102-2910	1	Nozzle Assembly, Inner
11	102-4587	1	Nozzle, Main, #51, Yellow
11	102-4588	1	Nozzle, Main, #52, Blue
11	102-4589	1	Nozzle, Main, #53, Brown
11	102-0728	1	Nozzle, Main, #54, Orange
11	102-0729	1	Nozzle, Main, #55, Green
11	102-0730	1	Nozzle, Main, #56, Gray
11	102-4261	1	Nozzle, Main, #57, Black
11	102-4260	1	Nozzle, Main, #58, Red
11	102-4259	1	Nozzle, Main, #59, Beige
12	363-4978	1	O-Ring, Main Nozzle
13	102-4335	1	Plug, Nozzle
14	102-2892	1	Riser Assembly
15	363-4236	1	Screw, Drive
16	102-4504	1	Drive Assy., 12-Pack
17	102-1939	1	Stator Assembly, Low Flow, Yellow
17	102-1940	1	Stator Assembly, Medium Flow, White (Used With #51-54 Main Nozzles)
17	102-1941	1	Stator Assembly, High-Flow, White (Used With #59 Nozzle)
18	102-1715	1	Screen, Riser
19		1	Body Assembly (See Golf Body Assembly Section.) ▲
	102-4337	1	Stream Straightener, Intermediate Nozzle ■ ●
	102-2041	1	Restrictor, Yellow, Inner Nozzle ■ ●
	118-1521	1	Main Nozzle Adapter ■ ●
	995-09	1	Valve Removal Tool ■ ●
	118-1843	1	Valve Insertion Tool ■ ●
	995-15	1	Selector Tool (Flag Key) ■ ●
	995-99	1	Nut Driver, 5/8" (For Main Nozzle) ■ ●
	995-105	1	Nut Driver, 5/16" (For Inner & Intermediate Nozzles And Plugs) ■ ●
	995-83	1	Multi-Purpose Tool ■ ●
	995-85	1	Riser Removal Tool ■ ●
	995-100	1	Valve Snap Ring Pliers With Screen Remover ■ ●
	995-102	1	Riser Hold-Up Tool, Universal ■ ●
	118-0954	1	Riser Hold-Up Tool, Red ■ ●

● SERVICE ITEMS
▲ Not serviced separately
■ Not illustrated

INF34 Series Golf Sprinkler w/ Dual Trajectory

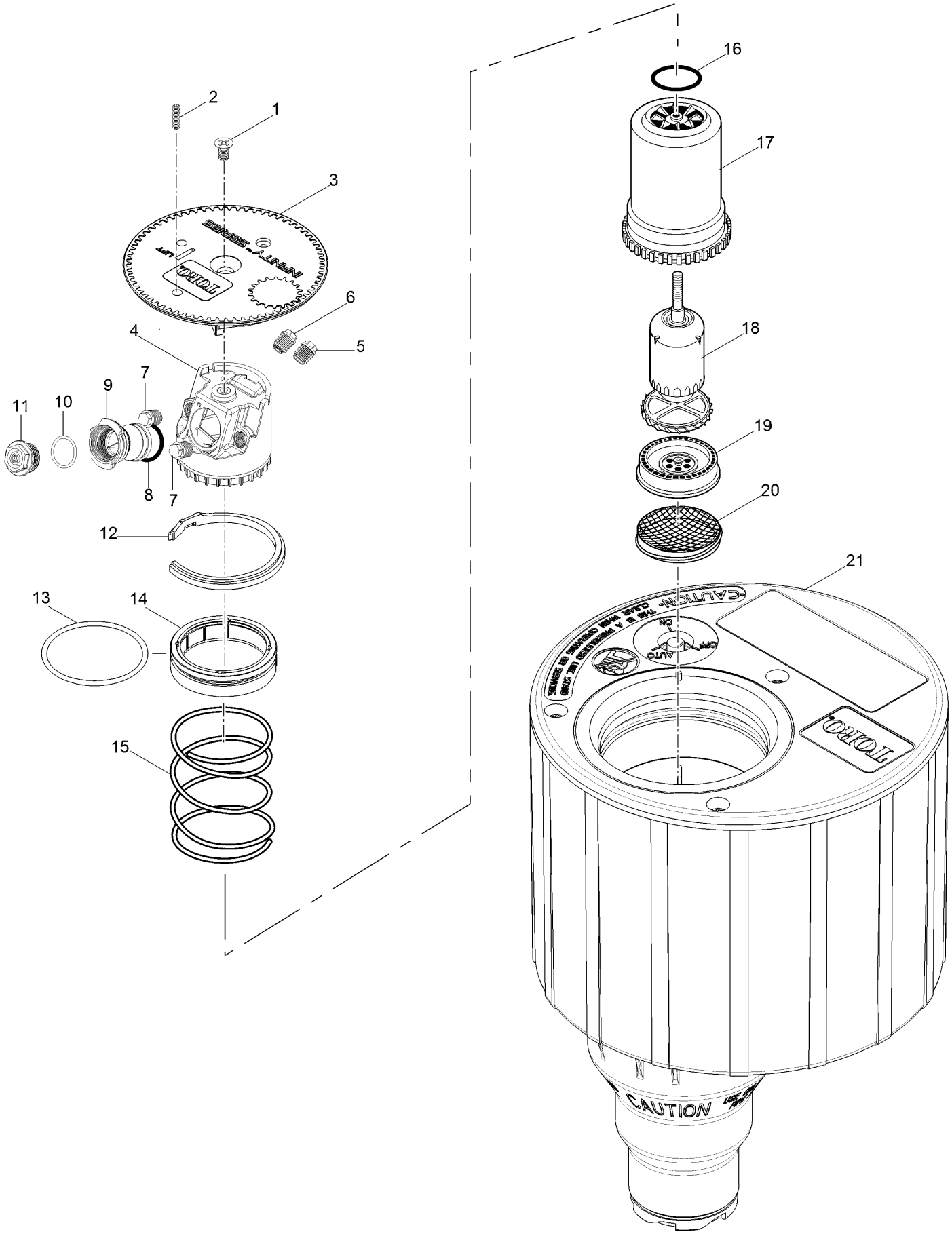

INF34 Series Golf Sprinkler w/ Dual Trajectory (continued)

Ref.	Part Number	Qty.	Description
1	102-0362	1	Screw, Cap
2	363-4839	1	Radius Reduction Screw
3	118-3089	1	Cap, Black
3	118-3093	1	Cap, Effluent
4	102-5837	1	Nozzle Base Assembly
5	102-2925	1	Intermediate Nozzle, Blue (Used With #31 Main Nozzle)
5	102-2926	1	Intermediate Nozzle, Orange (Used With #32 Main Nozzle)
5	102-2928	1	Intermediate Nozzle, Red (Used With #33 Main Nozzle)
5	102-2929	1	Intermediate Nozzle, Beige (Used With #34 And #35 Main Nozzles)
5	102-6944	1	Intermediate Nozzle Assy., Red W/ Stream Straightener (Used With #36 Main Nozzle)
5	102-6945	1	Intermediate Nozzle Assy., Gray W/ Stream Straightener (Used With #37 Main Nozzle)
6	102-6937	1	Nozzle Assy. Inner, Yellow Nozzle W/ Yellow Helical Restrictor
7	102-4335	2	Plug, Nozzle
8	102-5978	1	O-Ring, Nozzle Housing
9	102-5597	1	Nozzle Housing Assy.
10	363-4978	1	O-Ring, Main Nozzle
11	102-0725	1	Nozzle, Main, #31, Yellow
11	102-7001	1	Nozzle, Main, #32, Blue
11	102-0727	1	Nozzle, Main, #33, Brown
11	102-7002	1	Nozzle, Main, #34, Orange
11	102-6908	1	Nozzle, Main, #35, Green
11	102-0730	1	Nozzle, Main, #36, Gray
11	102-4261	1	Nozzle, Main, #37, Black
12	89-1385	1	Snap Ring, Riser
13	363-4102	1	O-Ring, Paraffin As-568 232
14	102-0134	1	Retainer, Seal
15	102-0151	1	Spring, Return
16	363-4167	1	O-Ring, Nozzle Base
17	102-0202	1	Riser
18	102-4503	1	Drive Assembly, 12-Pack
19	102-6929	1	Stator, Low Flow, High Velocity, Blue (Used With #31-34 Main Nozzles)
19	102-1940	1	Stator Assembly, Medium Flow, White (Used With #35-37 Main Nozzles)
20	102-1715	1	Screen, Riser
21		1	Body Assembly (See Golf Sprinkler Body Assembly Section) ▲
	995-08	1	Valve Removal Tool ■●
	118-1844	1	Valve Insertion Tool ■●
	995-15	1	Selector Tool (Flag Key) ■●
	995-99	1	Nut Driver, 5/8" (For Main Nozzle) ■●
	995-105	1	Nut Driver, 5/16" (For Inner & Intermediate Nozzles And Plugs) ■●
	995-83	1	Multi-Purpose Tool ■●
	995-85	1	Riser Removal Tool ■●
	995-100	1	Valve Snap Ring Pliers With Screen Remover ■●
	995-102	1	Riser Hold-Up Tool, Universal ■●
	118-0954	1	Riser Hold-Up Tool, Red ■●

● SERVICE ITEMS
▲ Not serviced separately
■ Not illustrated

INF35 Series Golf Sprinkler w/ Dual Trajectory

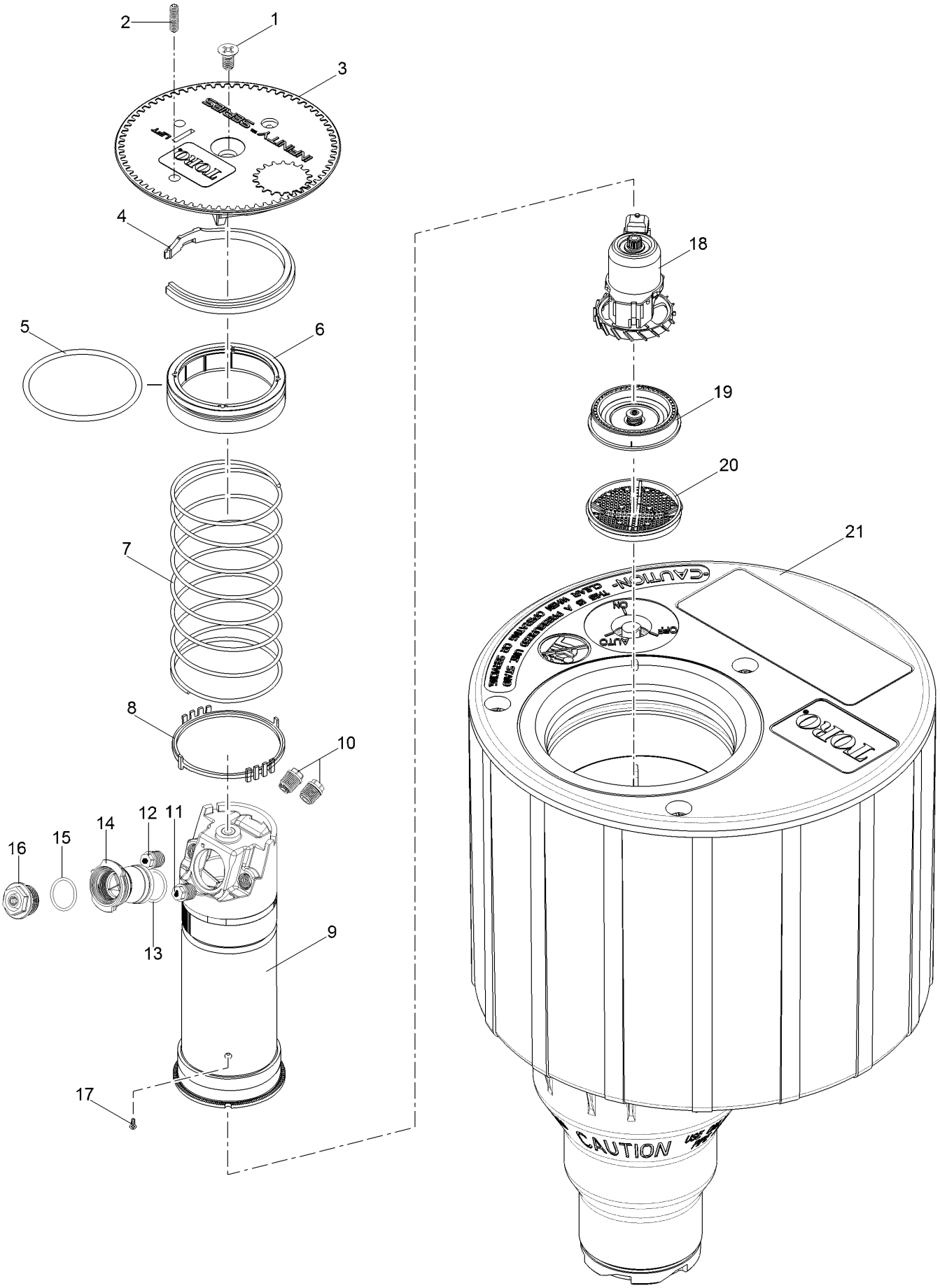

INF35 Series Golf Sprinkler w/ Dual Trajectory (continued)

Ref.	Part Number	Qty.	Description
1	102-6138	1	Screw, Cap, Black
2	363-4839	1	Radius Reduction Screw
3	118-3089	1	Cap, Black
3	118-3093	1	Cap, Effluent
4	89-1385	1	Snap Ring, Riser
5	363-4102	1	O-Ring, Paraffin As-568 232
6	102-0134	1	Retainer, Seal
7	102-0151	1	Spring, Return
8	102-2619	1	Ratchet Ring, 1"
9	118-1079	1	Riser Assembly
10	102-4335	2	Plug, Nozzle
11	102-5670	1	Nozzle Assy. Inner, Yellow W/ White Helical Restrictor (Used With #30-35 Main Nozzles)
11	102-6531	1	Nozzle Assy., Inner, Green W/ White Helical Restrictor (Used With #36-37 Main Nozzles)
12	102-6942	1	Intermediate Nozzle Assy., Beige W/ Stream Straightener (Used With #30 Main Nozzle)
12	102-5671	1	Intermediate Nozzle Assy., Brown W/ Stream Straightener (Used With #31 Main Nozzle)
12	102-6884	1	Intermediate Nozzle, Yellow (Used With #32-34 Main Nozzles)
12	102-6885	1	Intermediate Nozzle, Green (Used With #35-37 Main Nozzles)
13	102-5978	1	O-Ring, Nozzle Housing
14	102-5597	1	Nozzle Housing Assy.
15	363-4978	1	O-Ring, Main Nozzle
16	102-2208	1	Nozzle, Main, #30, Blank, White
16	102-6906	1	Nozzle, Main, #31, Yellow
16	102-0726	1	Nozzle, Main, #32, Blue
16	102-6907	1	Nozzle, Main, #33, Brown
16	102-0728	1	Nozzle, Main, #34, Orange
16	102-6955	1	Nozzle, Main, #35, Green
16	102-6935	1	Nozzle, Main, #36, Gray
16	102-6936	1	Nozzle, Main, #37, Black
16	118-1521	1	Main Nozzle Adapter
17	363-4236	1	Screw, Drive
18	102-4504	1	Drive Assy., 12-Pack
19	102-6929	1	Stator, Low Flow, High Velocity, Blue (Used With #30 Main Nozzle)
19	102-1939	1	Stator Assembly, Low Flow, Yellow (Used With #31-34 Main Nozzles)
19	102-1940	1	Stator Assembly, Medium Flow, White (Used With #35-37 Main Nozzles)
20	102-1715	1	Screen, Riser
21		1	Body Assembly (See Golf Body Assembly Section.) ▲
	995-08	1	Valve Removal Tool ■●
	118-1844	1	Valve Insertion Tool ■●
	995-15	1	Selector Tool (Flag Key) ■●
	995-99	1	Nut Driver, 5/8" (For Main Nozzle) ■●
	995-105	1	Nut Driver, 5/16" (For Inner & Intermediate Nozzles And Plugs) ■●
	995-83	1	Multi-Purpose Tool ■●
	995-85	1	Riser Removal Tool ■●
	995-100	1	Valve Snap Ring Pliers With Screen Remover ■●
	995-102	1	Riser Hold-Up Tool, Universal ■●
	118-0954	1	Riser Hold-Up Tool, Red ■●

● SERVICE ITEMS
▲ Not serviced separately
■ Not illustrated

INF35-6 Series Golf Sprinkler w/ 24-Pos TruJectory

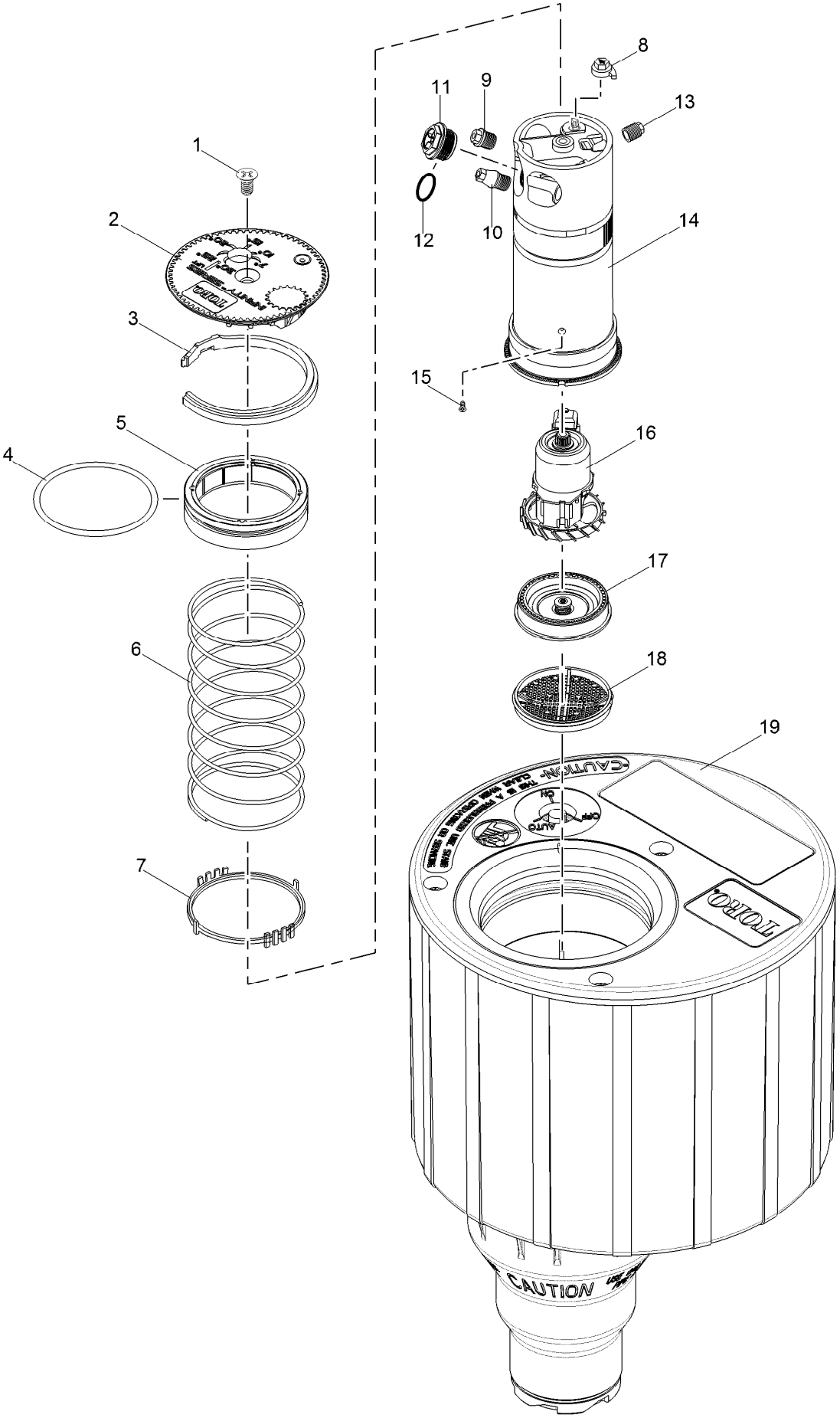

INF35-6 Series Golf Sprinkler w/ 24-Pos TruJectory (continued)

Ref.	Part Number	Qty.	Description
1	102-6138	1	Screw, Cap, Black
2	118-3090	1	Cap, Black
2	118-3094	1	Cap, Effluent
3	89-1385	1	Snap Ring, Riser
4	363-4102	1	O-Ring, Paraffin As-568 232
5	102-0134	1	Retainer, Seal
6	102-0151	1	Spring, Return
7	102-2619	1	Ratchet Ring, 1"
8	102-5971	1	Trajectory Adjuster
9	102-2925	1	Intermediate Nozzle, Blue (Used With #30, #31, #35 And #36 Main Nozzles)
9	102-2926	1	Intermediate Nozzle, Orange (Used With #33, #34 And #37 Main Nozzles)
9	102-2928	1	Intermediate Nozzle, Red (Used With #32 Main Nozzle)
10	102-2910	1	Nozzle Assembly, Inner
11	102-2208	1	Nozzle, Main, #30, Blank, White
11	102-4587	1	Nozzle, Main, #31, Yellow
11	102-4588	1	Nozzle, Main, #52, Blue
11	102-4589	1	Nozzle, Main, #53, Brown
11	102-0728	1	Nozzle, Main, #34, Orange
11	102-0729	1	Nozzle, Main, #55, Green
11	102-0730	1	Nozzle, Main, #36, Gray
11	102-4261	1	Nozzle, Main, #37, Black
11	118-1521	1	Main Nozzle Adapter
12	363-4978	1	O-Ring, Main Nozzle
13	102-4335	1	Plug, Nozzle

Ref.	Part Number	Qty.	Description
14	102-2892	1	Riser Assembly
15	363-4236	1	Screw, Drive
16	102-4504	1	Drive Assy., 12-Pack
17	102-6929	1	Stator, Low Flow, High Velocity, Blue (Used With #30 Main Nozzle And Nozzle Adapter)
17	102-1939	1	Stator Assembly, Low Flow, Yellow (Used With #31-34 Main Nozzles)
17	102-1940	1	Stator Assembly, Medium Flow, White (Used With #35-37 Main Nozzles)
18	102-1715	1	Screen, Riser
19		1	Body Assembly (See Golf Body Assembly Section.) ▲
	995-08	1	Valve Removal Tool ■●
	118-1844	1	Valve Insertion Tool ■●
	995-15	1	Selector Tool (Flag Key) ■●
	995-99	1	Nut Driver, 5/8" (For Main Nozzle) ■●
	995-105	1	Nut Driver, 5/16" (For Inner & Intermediate Nozzles And Plugs) ■●
	995-83	1	Multi-Purpose Tool ■●
	995-85	1	Riser Removal Tool ■●
	995-100	1	Valve Snap Ring Pliers With Screen Remover ■●
	995-102	1	Riser Hold-Up Tool, Universal ■●
	118-0954	1	Riser Hold-Up Tool, Red ■●

● SERVICE ITEMS
▲ Not serviced separately
■ Not illustrated

INFINITY Series 1 Inch Golf Sprinkler Body

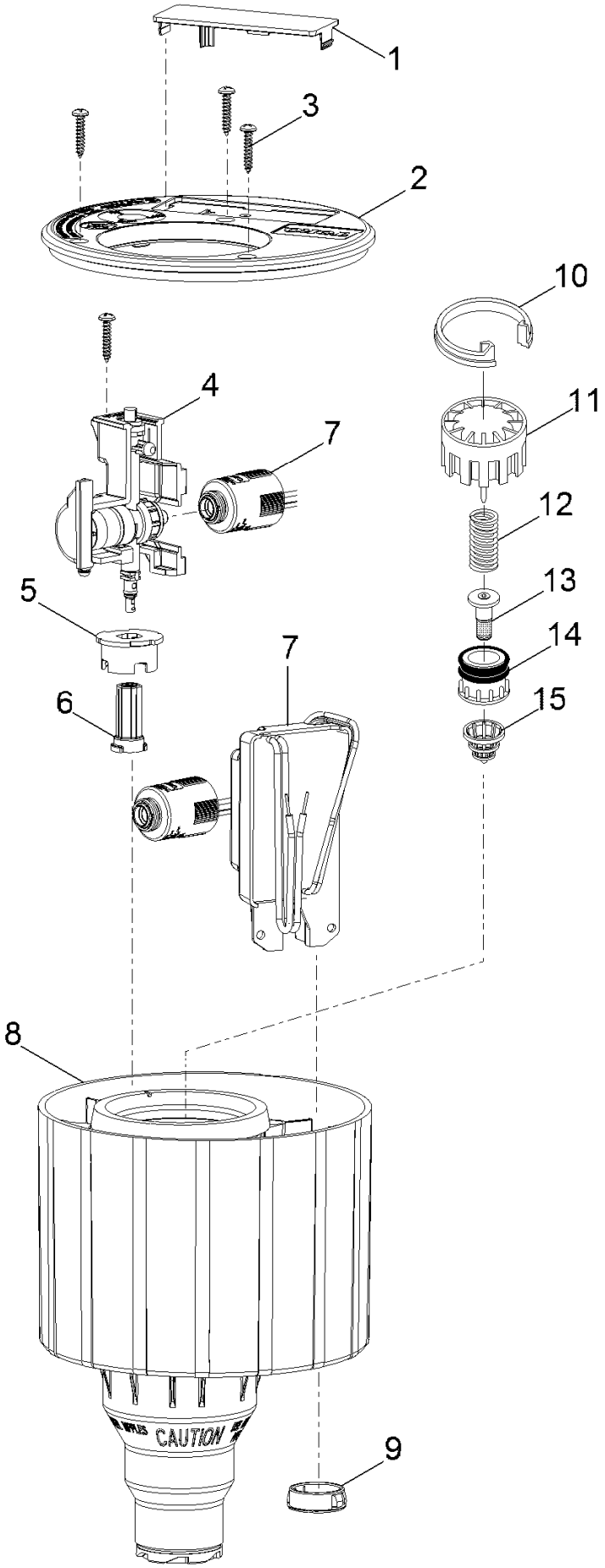

INFINITY Series 1 Inch Golf Sprinkler Body (continued)

Ref.	Part Number	Qty.	Description
1	118-1840	1	Marker, Blank
1	118-3029	1	Marker, Laser Etched
2	118-1813	1	Cover
3	4102001	6	Screw, Tap, 10-16 X 1.25
4	118-1826	1	Pilot Valve, Spike-Guard Solenoid
4	118-1982	1	Pilot Valve W/O Solenoid
4	118-1983	1	Pilot Valve W/ Nickel Plated Spike-Guard Solenoid
4	118-1984	1	Pilot Valve W/ Dc Latching Solenoid
4	118-1985	1	Pilot Valve W/ 600/700 Solenoid
5	118-1815	1	Retainer, Check Valve
6	118-1827	1	Check Flow Assy., Vih Communication
7	118-0248	1	Solenoid, 600/700 Series (Red & Black Wires)
7	102-3443	1	Solenoid-Low Wattage, W/Surge Protection (Black Wires)
7	102-3444	1	Solenoid-Low Wattage, W/Surge Protection, Nickel Plated (Red Wires)

Ref.	Part Number	Qty.	Description
7	102-2709	1	Solenoid Assy., 24Vdc, Latching (Red W/ White Stripe And Black Wires)
7	118-0841	1	Gdc Module, 1-Station, Golf Body With Solenoid
8	118-3031	1	Body, W/ Comp, 1" Acme
9	364-1164	1	Plug, Cable Access
10	89-4702	1	Snap Ring, Valve
11	102-0623	1	Cylinder Assy., El & No/Com
12	102-6411	1	Spring, Valve, El/No, Silver
13	35-9646	1	Filter Assy., Metering, El, Nc
14	89-1054	1	Piston Assy., El & Nc (Include Item 13)
15	102-0784	1	Rock Screen, 1"
	118-3651	1	Wire Splice Kit (Includes 2 Gel Caps And 2 Wire Nuts) ■●
	995-80	1	Nut Driver, 1/2 (For Check Flow Assembly)■●

● SERVICE ITEMS

■ Not illustrated

INFINITY Series 1.5 Inch Golf Sprinkler Body

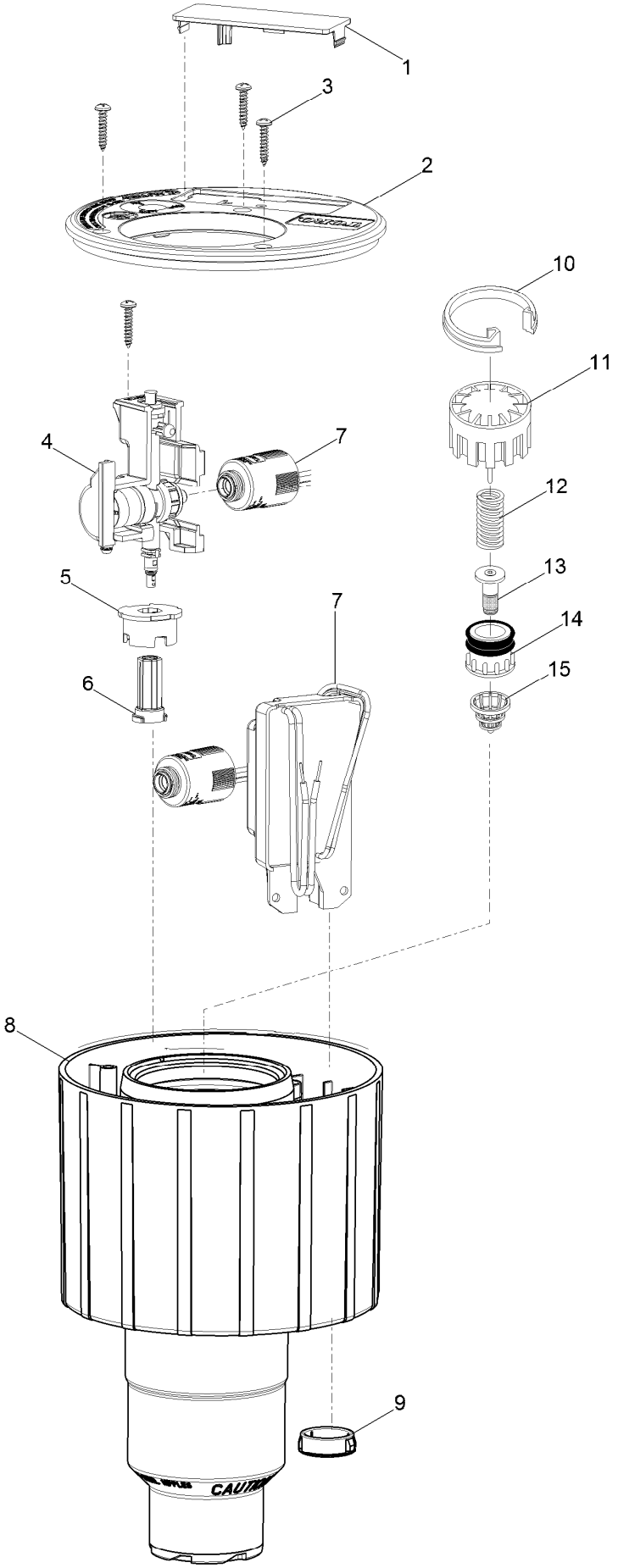

INFINITY Series 1.5 Inch Golf Sprinkler Body (continued)

Ref.	Part Number	Qty.	Description
1	118-1840	1	Marker, Blank
1	118-3029	1	Marker, Laser Etched
2	118-1813	1	Cover
3	4102001	6	Screw, Tap, 10-16 X 1.25
4	118-1826	1	Pilot Valve, Spike-Guard Solenoid
4	118-1982	1	Pilot Valve W/O Solenoid
4	118-1983	1	Pilot Valve W/ Nickel Plated Spike-Guard Solenoid
4	118-1984	1	Pilot Valve W/ Dc Latching Solenoid
4	118-1985	1	Pilot Valve W/ 600/700 Solenoid
5	118-1815	1	Retainer, Check Valve
6	118-1827	1	Check Flow Assy., Vih Communication
7	118-0248	1	Solenoid, 600/700 Series (Red & Black Wires)
7	102-3443	1	Solenoid-Low Wattage, W/Surge Protection (Black Wires)
7	102-3444	1	Solenoid-Low Wattage, W/Surge Protection, Nickel Plated (Red Wires)
7	102-2709	1	Solenoid Assy., 24Vdc, Latching (Red W/ White Stripe And Black Wires)
7	118-0841	1	Gdc Module, 1-Station, Golf Body With Solenoid
8	118-3030	1	Body, W/ Comp, 1.5" Acme
9	364-1164	1	Plug, Cable Access
10	3-3304	1	Snap Ring, Valve
11	102-0626	1	Cylinder Assy., El And No/Com
12	102-6411	1	Spring, Valve, El/No, Silver
13	35-9645	1	Filter Assy., Metering, El & Nc
14	102-5101	1	Piston Assy., El
15	102-6065	1	Rock Screen, 1.5"
	118-3651	1	Wire Splice Kit (Includes 2 Gel Caps And 2 Wire Nuts) ■●
	995-80	1	Nut Driver, 1/2 (For Check Flow Assembly)■●

● SERVICE ITEMS

■ Not illustrated

834S Series Sprinkler - Pre-August 2007

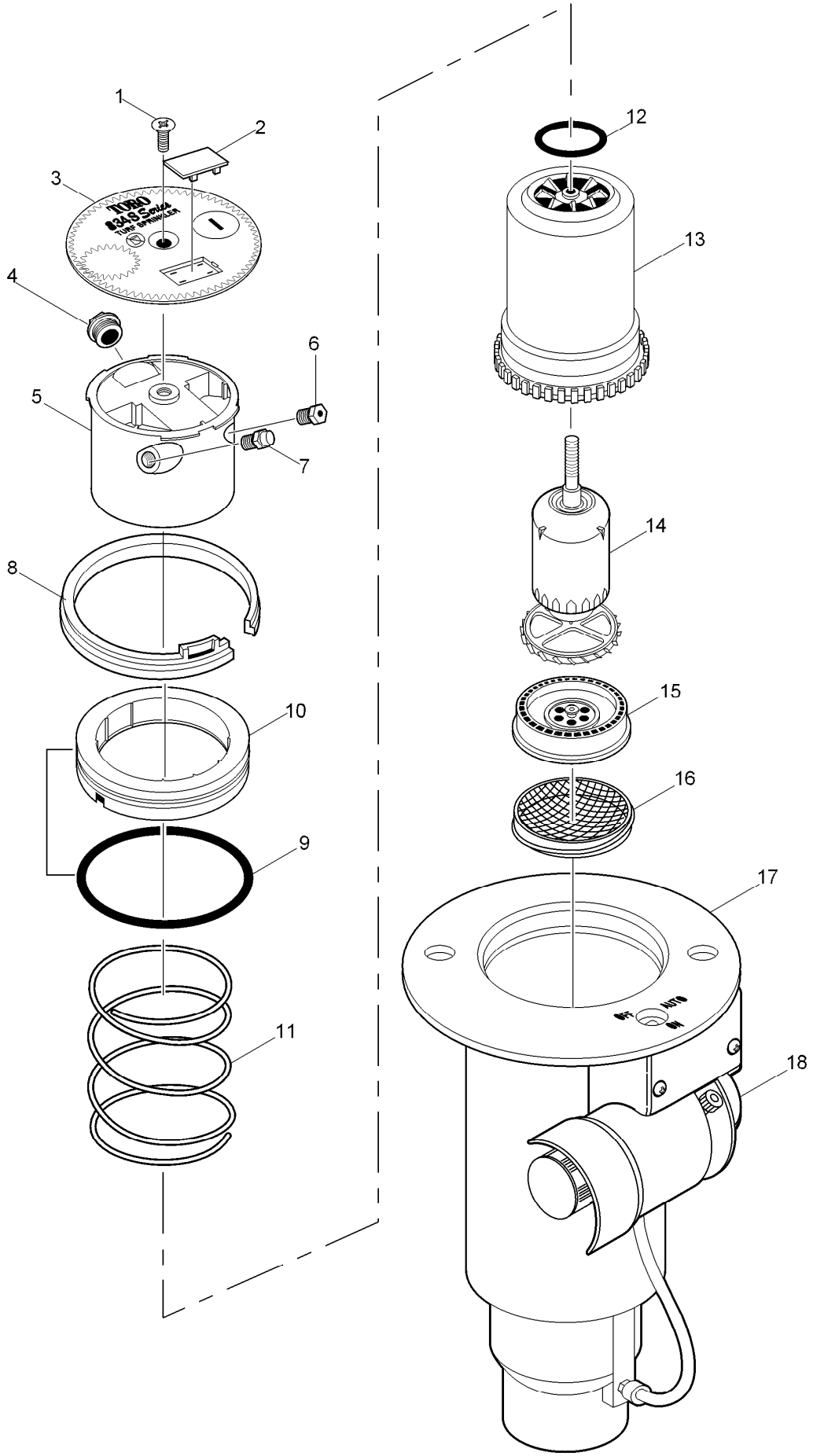

834S Series Sprinkler - Pre-August 2007 (continued)

Ref.	Part Number	Qty.	Description
1	102-0362	1	Screw, Cap
2	89-1589	1	Plug, Cap (Black)
3	102-0230	1	Cap, 834S
3	102-1703	1	Cap, 834S, Effluent
4	102-0725	1	Nozzle, Main, #31, Yellow
4	102-0726	1	Nozzle, Main, #32, Blue
4	102-0727	1	Nozzle, Main, #33, Brown
4	102-0728	1	Nozzle, Main, #34, Orange
4	102-0729	1	Nozzle, Main, #55, Green
4	102-0730	1	Nozzle, Main, #36, Gray
4	102-4261	1	Nozzle, Main, #37, Black
5	102-7406	1	Nozzle Base Kit, Dual Trajectory (Includes Items 1-5, 7-10 On 834S Present Models)
6	102-2105	1	Nozzle Assy. Intermediate, Blue (Used W/ #1 Yellow And #2 Blue Mains)
6	102-2106	1	Nozzle Assy. Intermediate, Orange (Used W/ #3 Brown & #4 Orange Mains)
6	102-2107	1	Nozzle Assy. Intermediate, Gray (Used W/ #5 Green & #6 Gray Mains)
6	102-2981	1	Nozzle Assy. Intermediate, Red (Used W/ #7 Black Main)
7	102-2980	1	Nozzle Assy. Inner, Red (W/ Restrictor)
8	89-1385	1	Snap Ring, Riser
9	363-4102	1	O-Ring, Paraffin As-568 232
10	102-0134	1	Retainer, Seal
11	102-0151	1	Spring, Return
12	363-4167	1	O-Ring, Nozzle Base
13	102-0202	1	Riser
14	102-4503	1	Drive Assembly, 12-Pack
15	102-1939	1	Stator Assembly, Low Flow, Yellow (Used W/ #1-#4 Mains)
15	102-1940	1	Stator Assembly, Medium Flow, White (Used W/ #5-#7 Mains)
16	102-1715	1	Screen, Riser
17		1	Body Assembly (See Golf Body Assembly Section) ❍ ◆
18		1	Pilot Valve Assembly (See Pilot Valve Assembly Section) ❑ ◆

Ref.	Part Number	Qty.	Description
	102-2208		Nozzle, Main, #30, Blank, White ● ▲
	102-0840		Nozzle, Inner/Intermediate, Blank, Red ● ▲
	102-2041		Restrictor, Yellow, Inner Nozzle ● ▲
	102-4337	1	Stream Straightener, Intermediate Nozzle ● ▲
	102-2502		Cap, 834S, W/O Graphics ● ▲
	102-2503		Cap, 834S, W/O Graphics, Effluent ● ▲
	YARDMARKYEL10		Yardage Marker, Yellow (10-Sheets Per Pack) ● ▲
	YARDMARKLAV10		Yardage Marker, Lavender (For Non-Potable Water Applications) ● ▲
	834S-3134		Conversion Assembly, 834S W/ #31, 32, 33, 34 Nozzles ◗ ▲
	834S-3134E		Conversion Assembly, 834S W/ #31, 32, 33, 34 Nozzles, Effluent (Lavender) ◗ ▲
	834S-3537		Conversion Assembly, 834S W/ #35, 36, 37 Nozzles ◗ ▲
	834S-3537E		Conversion Assembly, 834S W/ #35, 36, 37 Nozzles, Effluent (Lavender) ◗ ▲
	995-08		Valve Removal Tool ■ ▲
	995-15		Selector Tool (Flag Key) ■ ▲
	995-76		Valve Insertion Tool ■ ▲
	995-79		Nut Driver, 7/16" (For Inner And Intermediate Nozzles) ■ ▲
	995-83		Multi-Purpose Tool ■ ▲
	995-85		Riser Removal Tool ■ ▲
	995-99		Nut Driver, 5/8" (For Main Nozzle) ■ ▲
	995-100		Valve Snap Ring Pliers With Screen Remover ■ ▲
	995-102		Riser Hold-Up Tool, Universal ■ ▲
	118-0954	1	Riser Hold-Up Tool, Red ■ ▲

● SERVICE ITEMS
▲ Not illustrated
❑ See Pilot Valve Assembly Section.
◗ Order Through Finished Goods Distribution System - Minneapolis
■ SERVICE TOOLS
◆ Not serviced separately
❍ See Golf Sprinkler Body Assembly Section.

834S Series Sprinkler - August 2007-Present

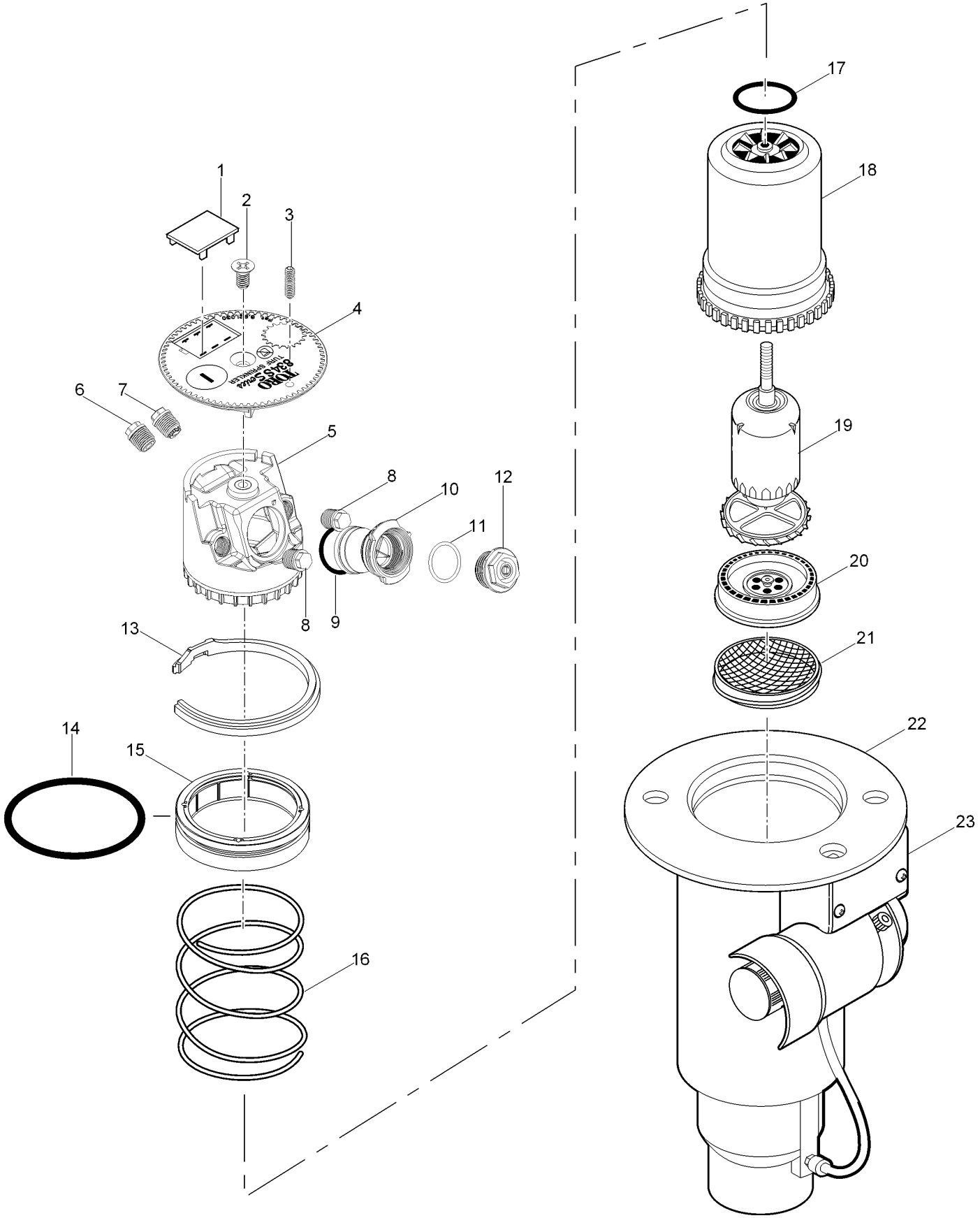

834S Series Sprinkler - August 2007-Present (continued)

Ref.	Part Number	Qty.	Description
1	89-1589	1	Plug, Cap (Black)
2	102-0362	1	Screw, Cap
3	363-4839	1	Radius Reduction Screw
4	102-5586	1	Cap, 834S
4	102-5590	1	Cap, 834S, Effluent
5	102-5837	1	Nozzle Base Assembly
6	102-2925	1	Intermediate Nozzle, Blue (Used W/ #1 Main)
6	102-2926	1	Intermediate Nozzle, Orange (Used W/ #2 Main)
6	102-2928	1	Intermediate Nozzle, Red (Used W/ #3 Main)
6	102-2929	1	Intermediate Nozzle, Beige (Used W/ #4 & #5 Mains)
6	102-6944	1	Intermediate Nozzle Assy., Red W/ Stream Straightener (Used W/ #6 Main)
6	102-6945	1	Intermediate Nozzle Assy., Gray W/ Stream Straightener (Used W/ #7 Main)
6	102-6883	1	Intermediate Nozzle, Brown (Used W/ #7 Main, Front Position On The Right Of Main)
7	102-6937	1	Nozzle Assy. Inner, Yellow Nozzle W/ Yellow Helical Restrictor
8	102-4335	2	Plug, Nozzle
9	102-5978	1	O-Ring, Nozzle Housing
10	102-5597	1	Nozzle Housing Assy. (Includes Item 9)
11	363-4978	1	O-Ring, Main Nozzle
12	102-0725	1	Nozzle, Main, #31, Yellow
12	102-7001	1	Nozzle, Main, #32, Blue
12	102-0727	1	Nozzle, Main, #33, Brown
12	102-7002	1	Nozzle, Main, #34, Orange
12	102-6908	1	Nozzle, Main, #35, Green
12	102-0730	1	Nozzle, Main, #36, Gray
12	102-4261	1	Nozzle, Main, #37, Black
13	89-1385	1	Snap Ring, Riser
14	363-4102	1	O-Ring, Paraffin As-568 232
15	102-0134	1	Retainer, Seal
16	102-0151	1	Spring, Return
17	363-4167	1	O-Ring, Nozzle Base
18	102-0202	1	Riser
19	102-4503	1	Drive Assembly, 12-Pack
20	102-6929	1	Stator, Low Flow, High Velocity, Blue (Used W/ #1-#4 Mains)
20	102-1940	1	Stator Assembly, Medium Flow, White (Used W/ #5-#7 Mains)
21	102-1715	1	Screen, Riser
22		1	Body Assembly (See Golf Sprinkler Body Assembly Section) ◆
23		1	Pilot Valve Assembly (See Pilot Valve Assembly Section) ◆
	102-2208		Nozzle, Main, #30, Blank, White ● ▲
	102-5672		Cap, Blank ● ▲
	102-5673		Cap, Blank, Effluent ● ▲
	YARDMARKYEL10		Yardage Marker, Yellow (10-Sheets Per Pack) ● ▲
	YARDMARKLAV10		Yardage Marker, Lavender (For Non-Potable Water Applications) ● ▲
	834S-3134		Conversion Assembly, 834S W/ #31, 32, 33, 34 Nozzles ❑ ▲
	834S-3134E		Conversion Assembly, 834S W/ #31, 32, 33, 34 Nozzles, Effluent (Lavender) ❑ ▲
	834S-3537		Conversion Assembly, 834S W/ #35, 36, 37 Nozzles ❑ ▲
	834S-3537E		Conversion Assembly, 834S W/ #35, 36, 37 Nozzles, Effluent (Lavender) ❑ ▲
	995-08		Valve Removal Tool ■ ▲
	995-76		Valve Insertion Tool ■ ▲
	995-15		Selector Tool (Flag Key) ■ ▲
	995-99		Nut Driver, 5/8" (For Main Nozzle) ■ ▲
	995-105		Nut Driver, 5/16" (For Inner & Intermediate Nozzles And Plugs) ■ ▲
	995-83		Multi-Purpose Tool ■ ▲
	995-85		Riser Removal Tool ■ ▲
	995-100		Valve Snap Ring Pliers With Screen Remover ■ ▲
	995-102	1	Riser Hold-Up Tool, Universal ■ ▲
	118-0954	1	Riser Hold-Up Tool, Red ■ ▲

● SERVICE ITEMS
▲ Not illustrated
❑ Order Through Finished Goods Distribution System - Minneapolis
■ SERVICE TOOLS
◆ Not serviced separately

835S Series Sprinklers

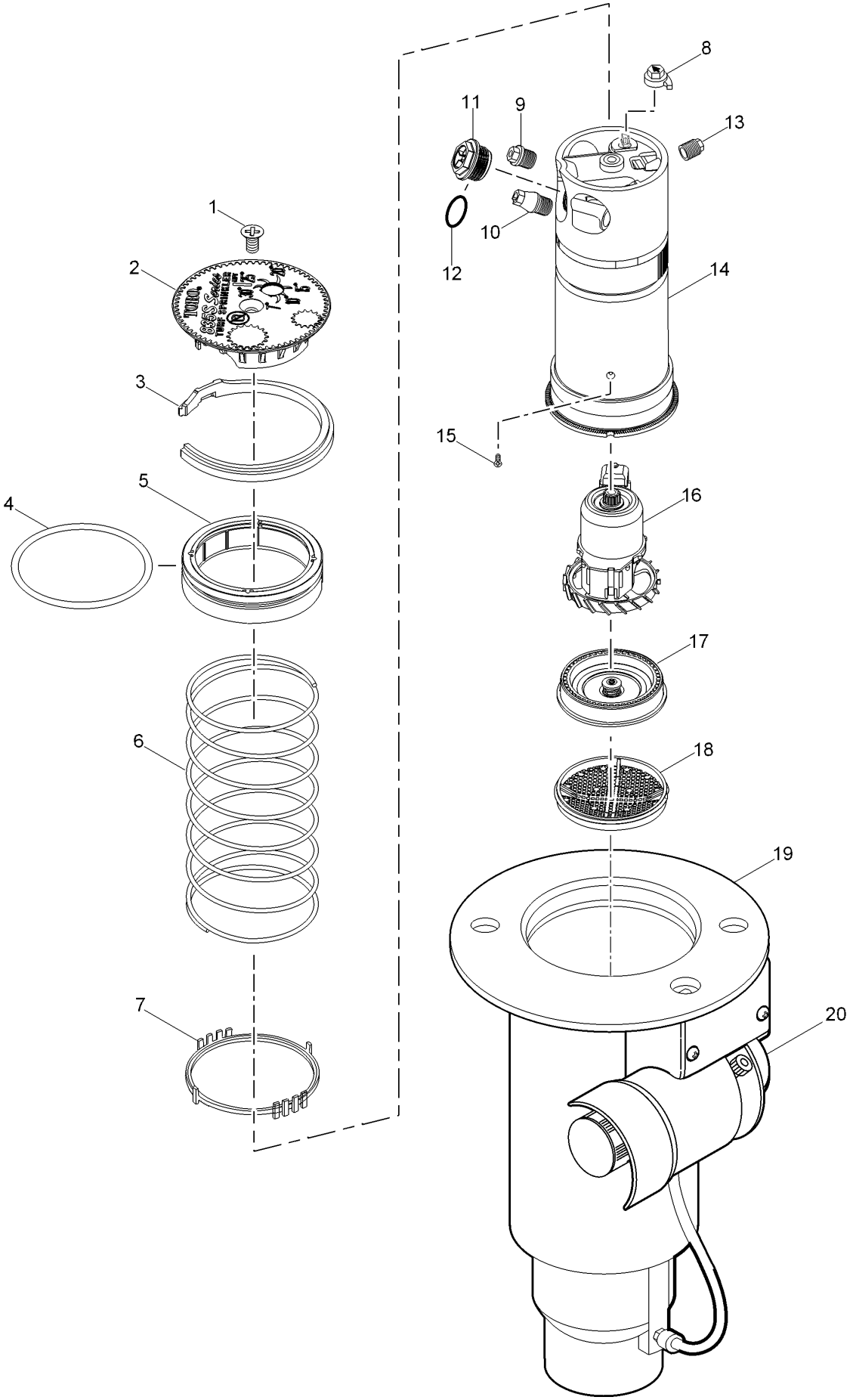

835S Series Sprinklers (continued)

Ref.	Part Number	Qty.	Description
1	102-6138	1	Screw, Cap, Black
2	102-2295	1	Cap, 835S
2	102-2493	1	Cap, Effluent, 835S
3	89-1385	1	Snap Ring, Riser
4	363-4102	1	O-Ring, Paraffin As-568 232
5	102-0134	1	Retainer, Seal
6	102-0151	1	Spring, Return
7	102-2619	1	Ratchet Ring, 1"
8	102-5971	1	Trajectory Adjuster
9	102-2925	1	Intermediate Nozzle, Blue (Used W/ #1, #5 & #6 Mains)
9	102-2926	1	Intermediate Nozzle, Orange (Used W/ #3, #4 & #7 Mains)
9	102-2928	1	Intermediate Nozzle, Red (Used W/ #2 Main)
10	102-2910	1	Nozzle Assembly, Inner
11	102-2208		Nozzle, Main, #30, Blank, White
11	102-4587	1	Nozzle, Main, #31, Yellow
11	102-4588	1	Nozzle, Main, #52, Blue
11	102-4589	1	Nozzle, Main, #53, Brown
11	102-0728	1	Nozzle, Main, #34, Orange
11	102-0729	1	Nozzle, Main, #55, Green
11	102-0730	1	Nozzle, Main, #36, Gray
11	102-4261	1	Nozzle, Main, #37, Black
12	363-4978	1	O-Ring, Main Nozzle
13	102-4335	1	Plug, Nozzle
14	102-2892	1	Riser Assembly
15	363-4236	1	Screw, Drive
16	102-4504	1	Drive Assy., 12-Pack
17	102-6929		Stator, Low Flow, High Velocity, Blue (Used W/ #0 Main)
17	102-1939	1	Stator Assembly, Low Flow, Yellow (Used W/ #1-#4 Mains)
17	102-1940	1	Stator Assembly, Medium Flow, White (Use W/ #5-#7 Mains)
18	102-1715	1	Screen, Riser
19		1	Body Assembly (See Golf Sprinkler Body Assembly Section) ❍ ◆
20		1	Pilot Valve Assembly (See Pilot Valve Assembly Section) ❑ ◆
	102-2041		Restrictor, Yellow, Inner Nozzle ● ▲
	102-4337		Stream Straightener, Intermediate Nozzle ● ▲
	102-2494		Cap, Blank, 835S ● ▲
	102-2495		Cap, Blank, Effluent, 835S ● ▲
	YARDMARKYEL10		Yardage Marker, Yellow (10-Sheets Per Pack) ● ▲
	YARDMARKLAV10		Yardage Marker, Lavender (For Non-Potable Water Applications) ● ▲
	835S-3134		Conversion Assy., 835S W/ #31, 32, 33, 34 Nozzles ◗ ▲
	835S-3134E		Conversion Assy., 835S W/ #31, 32, 33, 34 Nozzles, Effluent ◗ ▲
	835S-3537		Conversion Assy., 835S W/ #35, 36, 37 Nozzles ◗ ▲
	835S-3537E		Conversion Assy., 835S W/ #35, 36, 37 Nozzles, Effluent ◗ ▲
	995-08		Valve Removal Tool ■ ▲
	995-15		Selector Tool (Flag Key) ■ ▲
	995-76		Valve Insertion Tool ■ ▲
	995-83		Multi-Purpose Tool ■ ▲
	995-85		Riser Removal Tool ■ ▲
	995-99		Nut Driver, 5/8" (For Main Nozzle) ■ ▲
	995-105		Nut Driver, 5/16" (For Inner & Intermediate Nozzles And Plugs) ■ ▲
	995-100		Valve Snap Ring Pliers With Screen Remover ■ ▲
	995-102		Riser Hold-Up Tool, Universal ■ ▲
	118-0954	1	Riser Hold-Up Tool, Red ■ ▲

● SERVICE ITEMS
▲ Not illustrated
❑ See Pilot Valve Assembly Section.
◗ Order Through Finished Goods Distribution System - Minneapolis
■ SERVICE TOOLS
◆ Not serviced separately
❍ See Golf Sprinkler Body Assembly Section.

835B Series Sprinkler

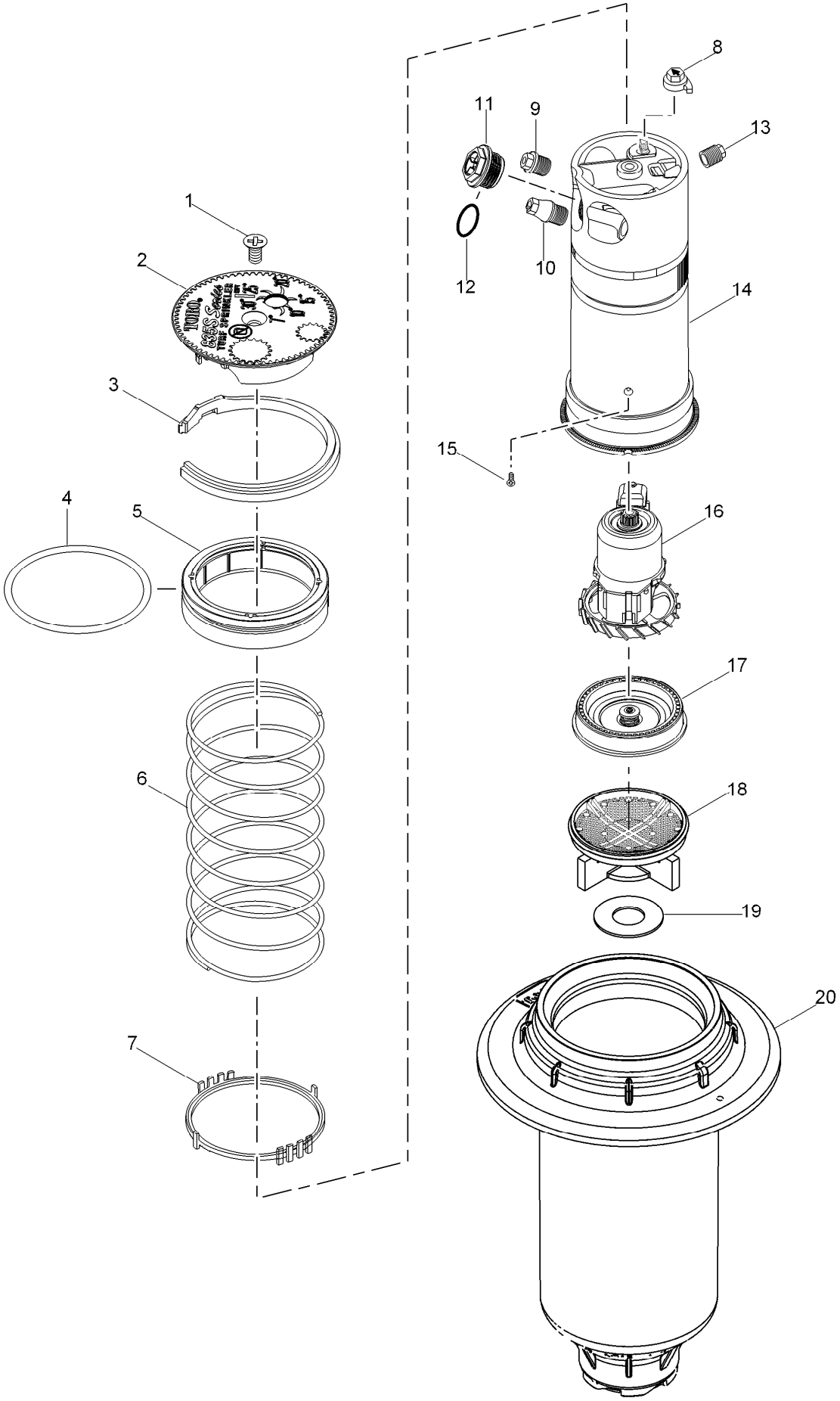

835B Series Sprinkler (continued)

Ref.	Part Number	Qty.	Description
1	102-6138	1	Screw, Cap, Black
2	102-2295	1	Cap, 835S
2	102-2493	1	Cap, Effluent, 835S
3	89-1385	1	Snap Ring, Riser
4	363-4102	1	O-Ring, Paraffin As-568 232
5	102-0134	1	Retainer, Seal
6	102-0151	1	Spring, Return
7	102-2619	1	Ratchet Ring, 1"
8	102-5971	1	Trajectory Adjuster
9	102-2925	1	Intermediate Nozzle, Blue (Use W/ #1, #5, #6 & #8 Mains)
9	102-2926	1	Intermediate Nozzle, Orange (Use W/ #3, #4 & #7 Mains)
9	102-2928	1	Intermediate Nozzle, Red (Use W/ #2 Main)
10	102-2910	1	Nozzle Assembly, Inner
11	102-2208	1	Nozzle, Main, #30, Blank, White
11	102-4587	1	Nozzle, Main, #31, Yellow
11	102-4588	1	Nozzle, Main, #52, Blue
11	102-4589	1	Nozzle, Main, #53, Brown
11	102-0728	1	Nozzle, Main, #34, Orange
11	102-0729	1	Nozzle, Main, #55, Green
11	102-0730	1	Nozzle, Main, #36, Gray
11	102-4261	1	Nozzle, Main, #37, Black
11	102-4260	1	Nozzle, Main, #58, Red
12	363-4978	1	O-Ring, Main Nozzle
13	102-4335	1	Plug, Nozzle
14	102-2892	1	Riser Assembly
15	363-4236	1	Screw, Drive
16	102-4504	1	Drive Assy., 12-Pack
17	102-6929	1	Stator, Low Flow, High Velocity, Blue ((Use W/ #0 Main)
17	102-1939	1	Stator Assembly, Low Flow, Yellow (Use W/ #1-#4 Mains)
17	102-1940	1	Stator Assembly, Medium Flow, White (Use W/ #5-#8 Mains)
18	102-5152	1	Screen, Riser, W/ Check Seal Holder
19	102-7437	1	Seal, Check
20	102-7419	1	Body, Npt
20	102-7420	1	Body, Bsp
20	102-7421	1	Body, Acme
	102-2041		Restrictor, Yellow, Inner Nozzle ● ▲
	102-4337	1	Stream Straightener, Intermediate Nozzle ● ▲
	102-2494		Cap, Blank, 835S ● ▲
	102-2495		Cap, Blank, Effluent, 835S ● ▲
	995-83		Multi-Purpose Tool ■ ▲
	995-85		Riser Removal Tool ■ ▲
	995-99		Nut Driver, 5/8" (For Main Nozzle) ■ ▲
	995-105		Nut Driver, 5/16" (For Inner & Intermediate Nozzles And Plugs) ■ ▲
	995-102		Riser Hold-Up Tool, Universal ■ ▲
	118-0954	1	Riser Hold-Up Tool, Red ■ ▲

● SERVICE ITEMS
▲ Not illustrated

■ SERVICE TOOLS

854S Series Sprinkler - Pre-2007

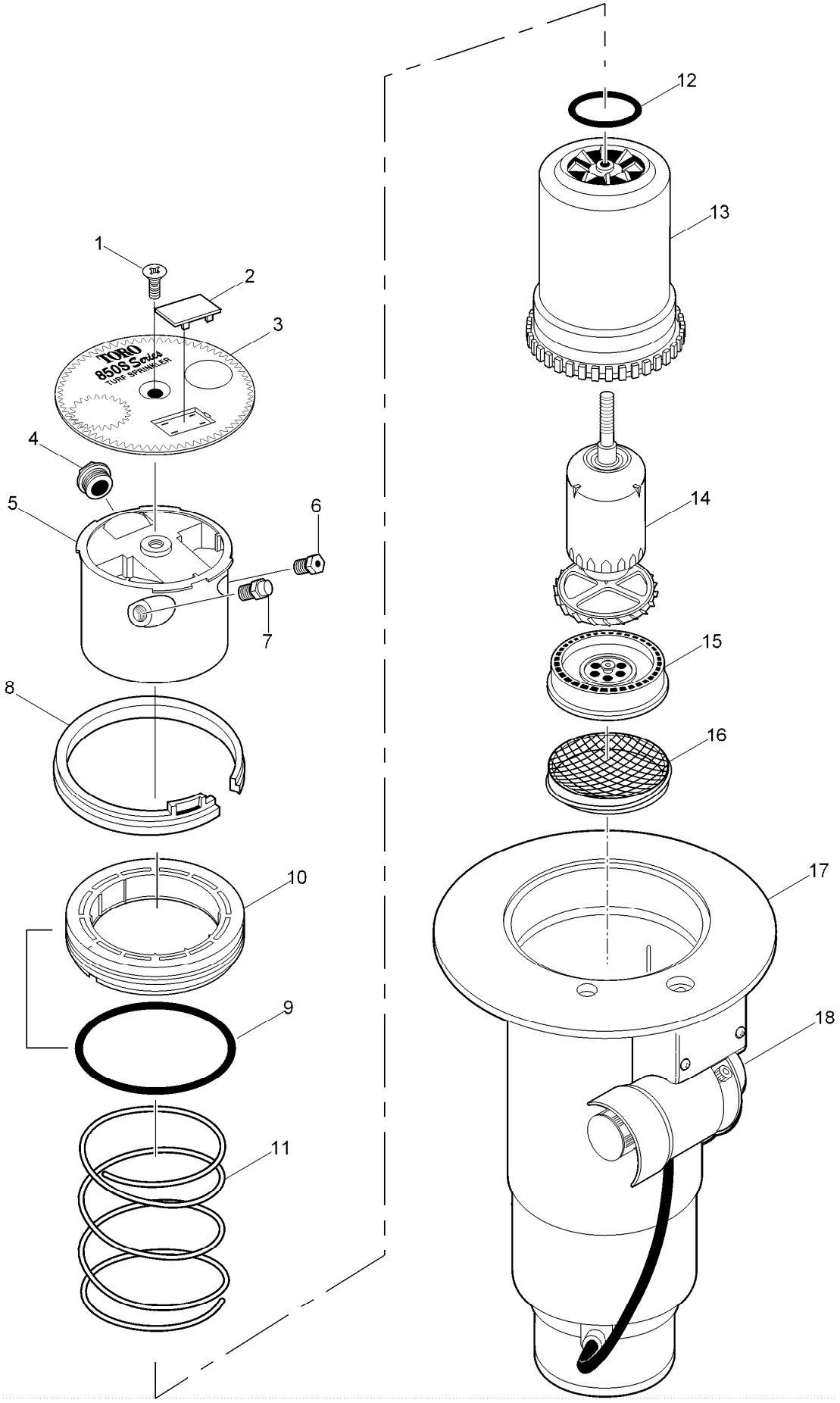

854S Series Sprinkler - Pre-2007 (continued)

Ref.	Part Number	Qty.	Description
1	102-0362	1	Screw, Cap
2	89-1589	1	Plug, Cap (Black)
3	102-0231	1	Cap, 854S
3	102-1704	1	Cap, 854S, Effluent
4	102-0725	1	Nozzle, Main, #31, Yellow
4	102-0726	1	Nozzle, Main, #32, Blue
4	102-0727	1	Nozzle, Main, #33, Brown
4	102-0728	1	Nozzle, Main, #34, Orange
4	102-0729	1	Nozzle, Main, #55, Green
4	102-0730	1	Nozzle, Main, #36, Gray
4	102-4261	1	Nozzle, Main, #37, Black
4	102-4260	1	Nozzle, Main, #58, Red
4	102-4259	1	Nozzle, Main, #59, Beige
5	102-7407	1	Nozzle Base Kit, Dual Trajectory (Includes Items 1-5 And 7-10 Found On 854S Present Model)
6	102-2105		Nozzle Assy. Intermediate, Blue (Used W/ #1 Yellow And #2 Blue Mains)
6	102-2106		Nozzle Assy. Intermediate, Orange (Used W/ #3 Brown & #4 Orange Mains)
6	102-2107		Nozzle Assy. Intermediate, Gray (Used W/ #5 Green & #6 Gray Mains)
6	102-2981	1	Nozzle Assy. Intermediate, Red (Used W/ #7-#9 Mains)
7	102-2980	1	Nozzle Assy. Inner, Red (W/ Restrictor)
8	35-6119	1	Snap Ring, Riser
9	363-4103	1	O-Ring, Body
10	102-0136	1	Retainer, Seal, 1.5"
11	102-0151	1	Spring, Return
12	363-4167	1	O-Ring, Nozzle Base
13	102-0203	1	Riser
14	102-4503	1	Drive Assembly, 12-Pack
15	102-1939	1	Stator Assembly, Low Flow, Yellow (Used W/ #1-#4 Mains)
15	102-1940	1	Stator Assembly, Medium Flow, White (Used W/ #5-#8 Mains)
15	102-1941	1	Stator Assembly, High-Flow, White (Used W/ #9 Main)
16	102-1715	1	Screen, Riser
17		1	Body Assembly (See Golf Sprinkler Body Assembly Section) ❍ ◆
18		1	Pilot Valve Assembly (See Pilot Valve Assembly Section) ❑ ◆

Ref.	Part Number	Qty.	Description
	102-0840		Nozzle, Inner/Intermediate, Blank, Red ● ▲
	102-4337		Stream Straightener, Intermediate Nozzle ● ▲
	102-2041		Restrictor, Yellow, Inner Nozzle ● ▲
	102-2504		Cap, 854S, W/O Graphics ● ▲
	102-2505		Cap, 854S, W/O Graphics, Effluent ● ▲
	102-0950		Adapter, Conversion ● ▲
	YARDMARKYEL10		Yardage Marker, Yellow (10-Sheets Per Pack) ● ▲
	YARDMARKLAV10		Yardage Marker, Lavender (For Non-Potable Water Applications) ● ▲
	854S-5154		Conversion Assembly, 854S W/ #51, 52, 53, 54 Nozzles ◗ ▲
	854S-5154E		Conversion Assembly, 854S W/ #51, 52, 53, 54 Nozzles, Effluent ◗ ▲
	854S-5558		Conversion Assembly, 854S W/ #55, 56, 57, 58 Nozzles ◗ ▲
	854S-5558E		Conversion Assembly, 854S W/ #55, 56, 57, 58 Nozzles, Effluent ◗ ▲
	854S-59		Conversion Assembly, 854S W/ #59 Nozzle ◗ ▲
	854S-59E		Conversion Assembly, 854S W/ #59 Nozzle, Effluent ◗ ▲
	995-09		Valve Removal Tool ■ ▲
	995-101		Valve Insertion Tool ■ ▲
	995-15		Selector Tool (Flag Key) ■ ▲
	995-79		Nut Driver, 7/16" (For Inner And Intermediate Nozzles) ■ ▲
	995-99		Nut Driver, 5/8" (For Main Nozzle) ■ ▲
	995-83		Multi-Purpose Tool ■ ▲
	995-85		Riser Removal Tool ■ ▲
	995-100		Valve Snap Ring Pliers With Screen Remover ■ ▲
	995-102		Riser Hold-Up Tool, Universal ■ ▲
	118-0954	1	Riser Hold-Up Tool, Red ■ ▲

● SERVICE ITEMS
▲ Not illustrated
❑ See Pilot Valve Assembly Section.
◗ Order Through Finished Goods Distribution System - Minneapolis
■ SERVICE TOOLS
◆ Not serviced separately
❍ See Golf Sprinkler Body Assembly Section.

854S Series Sprinkler - August 2007 - Present

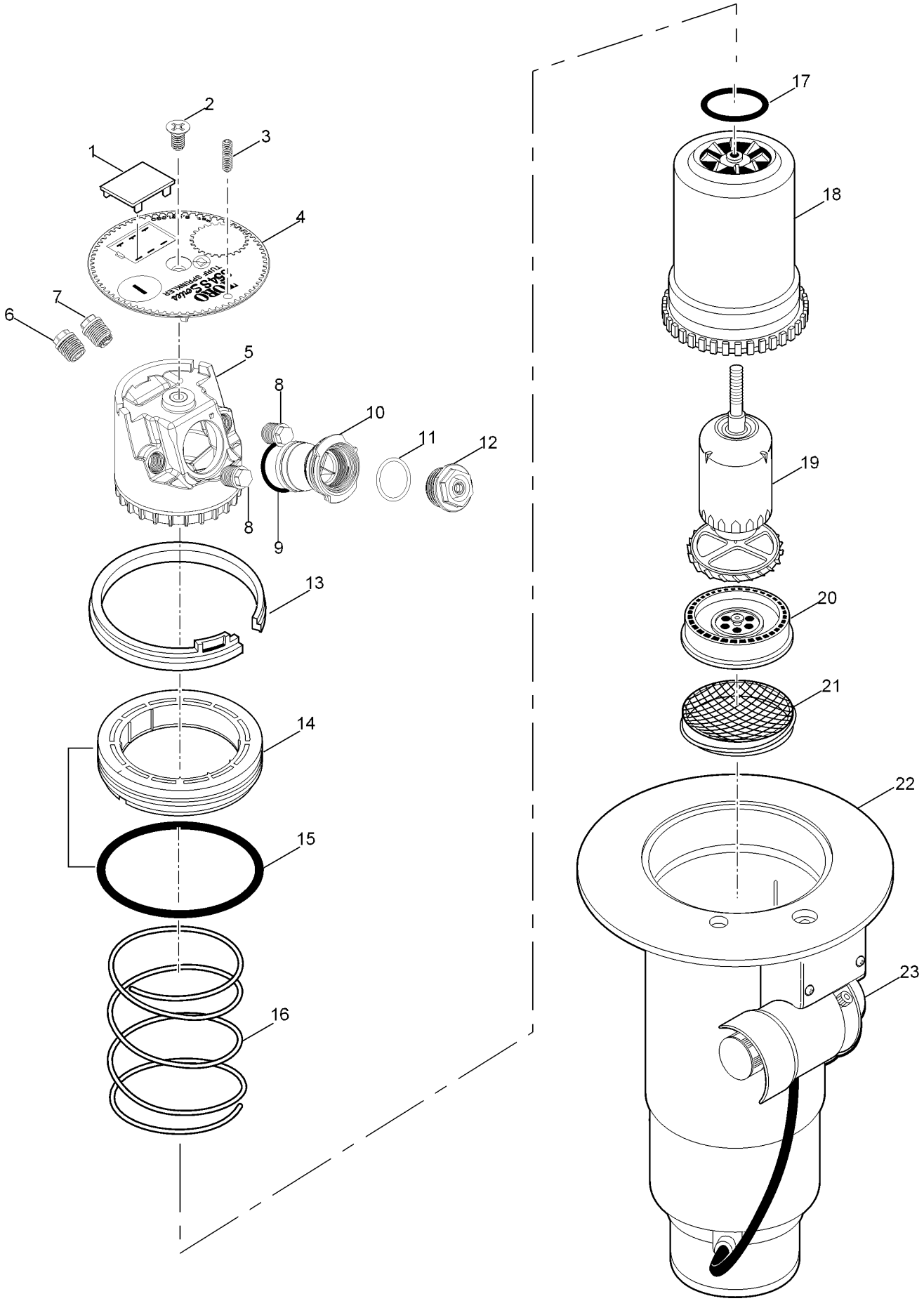

854S Series Sprinkler - August 2007 - Present (continued)

Ref.	Part Number	Qty.	Description
1	89-1589	1	Plug, Cap (Black)
2	102-0362	1	Screw, Cap
3	363-4839	1	Radius Reduction Screw
4	102-5587	1	Cap, 854S
4	102-5591	1	Cap, 854S, Effluent
5	102-5837	1	Nozzle Base Assembly
6	102-2925	1	Intermediate Nozzle, Blue (Used W/ #1 Main)
6	102-2926	1	Intermediate Nozzle, Orange (Used W/ #2 Main)
6	102-2928	1	Intermediate Nozzle, Red (Used W/ #3 Main)
6	102-2929	1	Intermediate Nozzle, Beige (Used W/ #4 & #5 Mains)
6	102-6944	1	Intermediate Nozzle Assy., Red W/ Stream Straightener (Used W/ #6 Main)
6	102-6945	1	Intermediate Nozzle Assy., Gray W/ Stream Straightener (Used W/ #7-#9 Mains)
6	102-6883	1	Intermediate Nozzle, Brown (Used W/ #7 & #8 Mains, Front Position, Right Of Main)
7	102-6937	1	Nozzle Assy. Inner, Yellow Nozzle W/ Yellow Helical Restrictor
8	102-4335	2	Plug, Nozzle
9	102-5978	1	O-Ring, Nozzle Housing
10	102-5597	1	Nozzle Housing Assy. (Includes Item 9)
11	363-4978	1	O-Ring, Main Nozzle
12	102-0725	1	Nozzle, Main, #31, Yellow
12	102-7001	1	Nozzle, Main, #32, Blue
12	102-0727	1	Nozzle, Main, #33, Brown
12	102-7002	1	Nozzle, Main, #34, Orange
12	102-6908	1	Nozzle, Main, #35, Green
12	102-0730	1	Nozzle, Main, #36, Gray
12	102-4261	1	Nozzle, Main, #37, Black
12	102-4260	1	Nozzle, Main, #58, Red
12	102-4259	1	Nozzle, Main, #59, Beige
13	35-6119	1	Snap Ring, Riser
14	102-0136	1	Retainer, Seal, 1.5"
15	363-4103	1	O-Ring, Body
16	102-0151	1	Spring, Return
17	363-4167	1	O-Ring, Nozzle Base
18	102-0203	1	Riser
19	102-4503	1	Drive Assembly, 12-Pack
20	102-6929	1	Stator, Low Flow, High Velocity, Blue (Used W/ #1-#4 Mains)
20	102-1940	1	Stator Assembly, Medium Flow, White (Used W/ #5-#8 Mains)
20	102-1941	1	Stator Assembly, High-Flow, White (Used W/ #9 Main)
21	102-1715	1	Screen, Riser
22		1	Body Assembly (See Golf Sprinkler Body Assembly Section) ❍ ◆
23		1	Pilot Valve Assembly (See Pilot Valve Assembly Section) ❑ ◆
	102-5674		Cap, Blank ● ▲
	102-5675		Cap, Blank, Effluent ● ▲
	102-0950		Adapter, Conversion ● ▲
	102-5011		Adapter,Conversion, 690 ◗ ▲
	YARDMARKYEL10		Yardage Marker, Yellow (10-Sheets Per Pack) ● ▲
	YARDMARKLAV10		Yardage Marker, Lavender (For Non-Potable Water Applications) ● ▲
	854S-5154		Conversion Assembly, 854S W/ #51, 52, 53, 54 Nozzles ▲ ◗
	854S-5154E		Conversion Assembly, 854S W/ #51, 52, 53, 54 Nozzles, Effluent ▲ ◗
	854S-5558		Conversion Assembly, 854S W/ #55, 56, 57, 58 Nozzles ▲ ◗
	854S-5558E		Conversion Assembly, 854S W/ #55, 56, 57, 58 Nozzles, Effluent ▲ ◗
	854S-59		Conversion Assembly, 854S W/ #59 Nozzle ▲ ◗
	854S-59E		Conversion Assembly, 854S W/ #59 Nozzle, Effluent ▲ ◗
	995-09		Valve Removal Tool ■ ▲
	995-101		Valve Insertion Tool ■ ▲
	995-15		Selector Tool (Flag Key) ■ ▲
	995-99		Nut Driver, 5/8" (For Main Nozzle) ■ ▲
	995-105		Nut Driver, 5/16" (For Inner & Intermediate Nozzles And Plugs) ■ ▲
	995-83		Multi-Purpose Tool ■ ▲
	995-85		Riser Removal Tool ■ ▲
	995-100		Valve Snap Ring Pliers With Screen Remover ■ ▲
	995-102		Riser Hold-Up Tool, Universal ■ ▲
	118-0954	1	Riser Hold-Up Tool, Red ■ ▲

● SERVICE ITEMS
▲ Not illustrated
❑ See Pilot Valve Assembly Section.
◗ Order Through Finished Goods Distribution System - Minneapolis
■ SERVICE TOOLS
◆ Not serviced separately
❍ See Golf Sprinkler Body Assembly Section.

855S Series Sprinkler

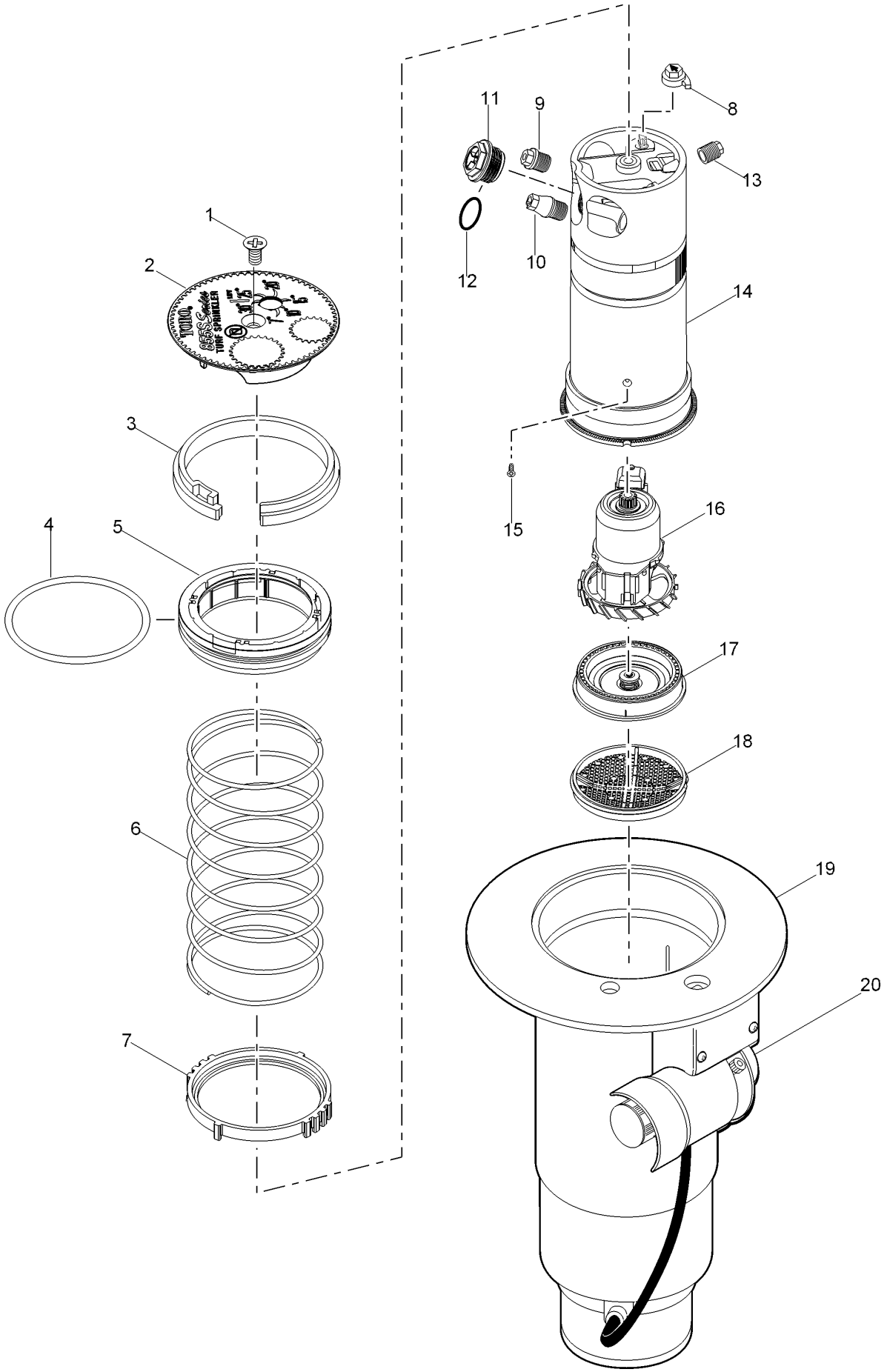

855S Series Sprinkler (continued)

Ref.	Part Number	Qty.	Description
1	102-6138	1	Screw, Cap, Black
2	102-2296	1	Cap, 855S
2	102-2496	1	Cap, Effluent, 855S
3	35-6119	1	Snap Ring, Riser
4	363-4103	1	O-Ring, Body
5	102-0136	1	Retainer, Seal, 1.5"
6	102-0151	1	Spring, Return
7	102-4967	1	Ratchet Ring, 1.5"
8	102-5971	1	Trajectory Adjuster
9	102-2925	1	Intermediate Nozzle, Blue (Use W/ #1, #5, #6 #8 & #9 Mains)
9	102-2926	1	Intermediate Nozzle, Orange (Use W/ #3, #4 & #7 Mains)
9	102-2928	1	Intermediate Nozzle, Red (Use W/ #2 Main)
10	102-2910	1	Nozzle Assembly, Inner
11	102-4587	1	Nozzle, Main, #31, Yellow
11	102-4588	1	Nozzle, Main, #52, Blue
11	102-4589	1	Nozzle, Main, #53, Brown
11	102-0728	1	Nozzle, Main, #34, Orange
11	102-0729	1	Nozzle, Main, #55, Green
11	102-0730	1	Nozzle, Main, #36, Gray
11	102-4261	1	Nozzle, Main, #37, Black
11	102-4260	1	Nozzle, Main, #58, Red
11	102-4259	1	Nozzle, Main, #59, Beige
12	363-4978	1	O-Ring, Main Nozzle
13	102-4335	1	Plug, Nozzle
14	102-2892	1	Riser Assembly
15	363-4236	1	Screw, Drive
16	102-4504	1	Drive Assy., 12-Pack
17	102-1939	1	Stator Assembly, Low Flow, Yellow (Use W/ #1-#4 Mains)
17	102-1940	1	Stator Assembly, Medium Flow, White (Use W/ #5-#8 Mains)
17	102-1941	1	Stator Assembly, High-Flow, White (Use W/ #9 Main)
18	102-1715	1	Screen, Riser
19		1	Body Assembly (See Golf Sprinkler Body Assembly Section) ❍ ◆
20		1	Pilot Valve Assembly (See Pilot Valve Assembly Section) ❑ ◆

Ref.	Part Number	Qty.	Description
	102-4337		Stream Straightener, Intermediate Nozzle ● ▲
	102-2041		Restrictor, Yellow, Inner Nozzle ● ▲
	102-2497		Cap, Blank, 855S ● ▲
	102-2498		Cap, Blank, Effluent, 855S ● ▲
	102-0950		Adapter, Conversion ● ▲
	102-5011	1	Adapter,Conversion, 690 ◗ ▲
	YARDMARKYEL	10	Yardage Marker, Yellow (10-Sheets Per Pack) ● ▲
	YARDMARKLAV	10	Yardage Marker, Lavender (For Non-Potable Water Applications) ● ▲
	855S-5154		Conversion Assembly, 855S W/ #51, 52, 53, 54 Nozzles ◗ ▲
	855S-5154E		Conversion Assembly, 855S W/ #51, 52, 53, 54 Nozzles, Effluent ◗ ▲
	855S-5558		Conversion Assembly, 855S W/ #55, 56, 57, 58 Nozzles ◗ ▲
	855S-5558E		Conversion Assembly, 855S W/ #55, 56, 57, 58 Nozzles, Effluent ◗ ▲
	855S-59		Conversion Assembly, 855S W/ #59 ◗ ▲
	855S-59E		Conversion Assembly, 855S W/ #59, Effluent ◗ ▲
	995-09		Valve Removal Tool ■ ▲
	995-101		Valve Insertion Tool ■ ▲
	995-15		Selector Tool (Flag Key) ■ ▲
	995-99		Nut Driver, 5/8" (For Main Nozzle) ■ ▲
	995-105		Nut Driver, 5/16" (For Inner & Intermediate Nozzles And Plugs) ■ ▲
	995-83		Multi-Purpose Tool ■ ▲
	995-85		Riser Removal Tool ■ ▲
	995-100		Valve Snap Ring Pliers With Screen Remover ■ ▲
	995-102		Riser Hold-Up Tool, Universal ■ ▲
	118-0954	1	Riser Hold-Up Tool, Red ■ ▲

● SERVICE ITEMS
▲ Not illustrated
❑ See Pilot Valve Assembly Section.
◗ Order Through Finished Goods Distribution System - Minneapolis
■ SERVICE TOOLS
◆ Not serviced separately
❍ See Golf Sprinkler Body Assembly Section.

855S Series Ribless Body, Conversion Assembly

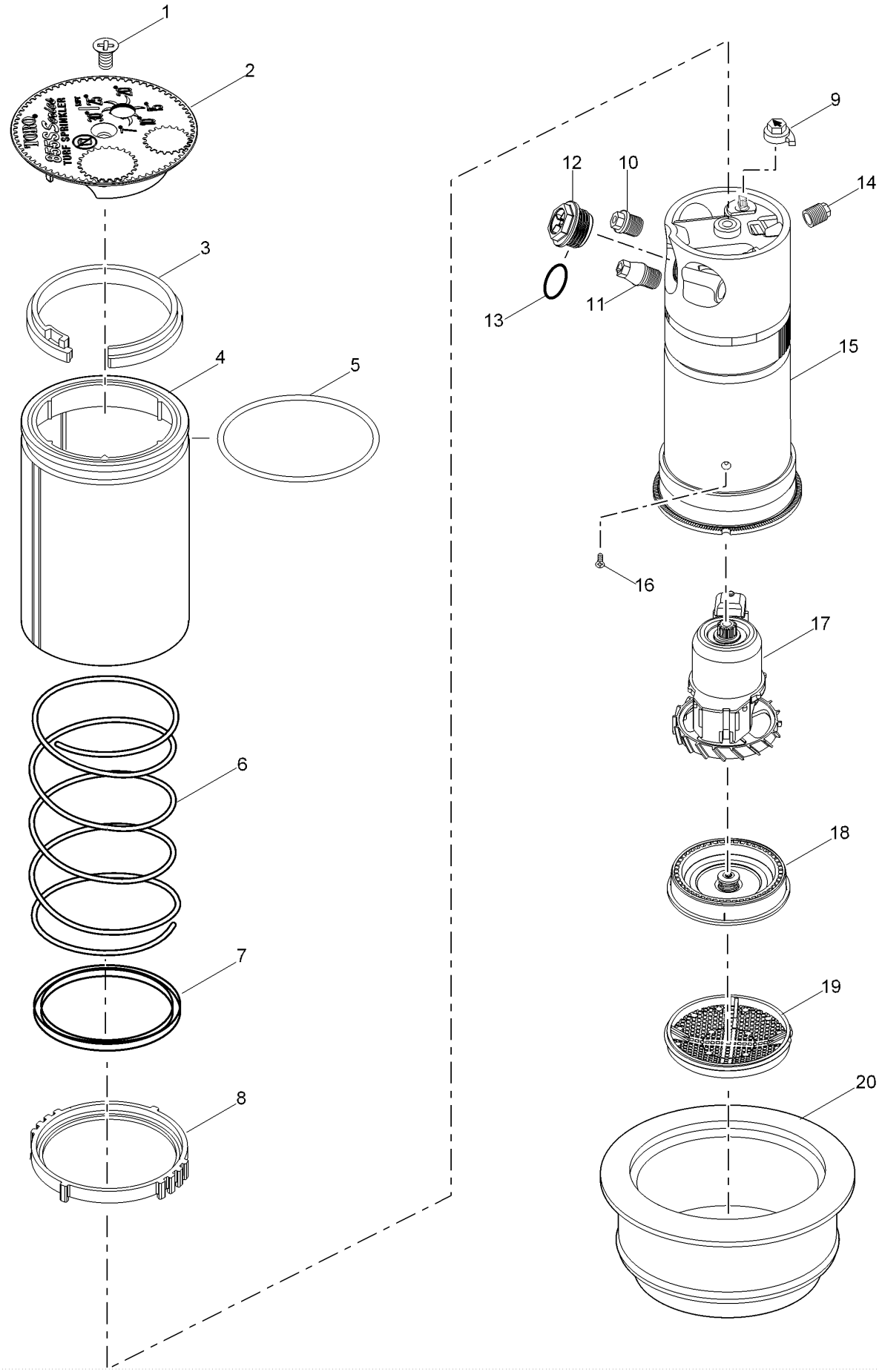

855S Series Ribless Body, Conversion Assembly (continued)

Ref.	Part Number	Qty.	Description
1	102-6138	1	Screw, Cap, Black
2	102-2296	1	Cap, 855S
2	102-2496	1	Cap, Effluent, 855S
3	35-6119	1	Snap Ring, Riser
4	89-7568	1	Sleeve, Retainer, O-Ring, Conversion
5	363-4103	1	O-Ring, Body
6	102-0151	1	Spring, Return
7	89-7569	1	Seal, Riser
8	102-2619	1	Ratchet Ring, 1"
9	102-5971	1	Trajectory Adjuster
10	102-2925	1	Intermediate Nozzle, Blue (Use W/ #1, #5, #6, #8 & #9 Mains)
10	102-2926	1	Intermediate Nozzle, Orange (Use W/ #3, #4 & #7 Mains)
10	102-2928	1	Intermediate Nozzle, Red (Use W/ #2 Main)
11	102-2910	1	Nozzle Assembly, Inner
12	102-4587	1	Nozzle, Main, #31, Yellow
12	102-4588	1	Nozzle, Main, #52, Blue
12	102-4589	1	Nozzle, Main, #53, Brown
12	102-0728	1	Nozzle, Main, #34, Orange
12	102-0729	1	Nozzle, Main, #55, Green
12	102-0730	1	Nozzle, Main, #36, Gray
12	102-4261	1	Nozzle, Main, #37, Black
12	102-4260	1	Nozzle, Main, #58, Red
12	102-4259	1	Nozzle, Main, #59, Beige
13	363-4978	1	O-Ring, Main Nozzle
14	102-4335	1	Plug, Nozzle
15	102-2892	1	Riser Assembly
16	363-4236	1	Screw, Drive
17	102-4504	1	Drive Assy., 12-Pack
18	102-1939	1	Stator Assembly, Low Flow, Yellow (Use W/ #1-#4 Mains)
18	102-1940	1	Stator Assembly, Medium Flow, White (Use W/ #5-#8 Mains)
18	102-1941	1	Stator Assembly, High-Flow, White (Use W/ #9 Main)
19	102-1715	1	Screen, Riser
20	102-0950	1	Adapter, Conversion
	102-4337		Stream Straightener, Intermediate Nozzle ● ▲
	102-2041		Restrictor, Yellow, Inner Nozzle ● ▲
	102-2497		Cap, Blank, 855S ● ▲
	102-2498		Cap, Blank, Effluent, 855S ● ▲
	995-09		Valve Removal Tool ■ ▲
	995-101		Valve Insertion Tool ■ ▲
	995-15		Selector Tool (Flag Key) ■ ▲
	995-99		Nut Driver, 5/8" (For Main Nozzle) ■ ▲
	995-105		Nut Driver, 5/16" (For Inner & Intermediate Nozzles And Plugs) ■ ▲
	995-83		Multi-Purpose Tool ■ ▲
	995-85		Riser Removal Tool ■ ▲
	995-100		Valve Snap Ring Pliers With Screen Remover ■ ▲
	995-102		Riser Hold-Up Tool, Universal ■ ▲
	118-0954	1	Riser Hold-Up Tool, Red ■ ▲

● SERVICE ITEMS
▲ Not illustrated

■ SERVICE TOOLS

860S Series Sprinkler

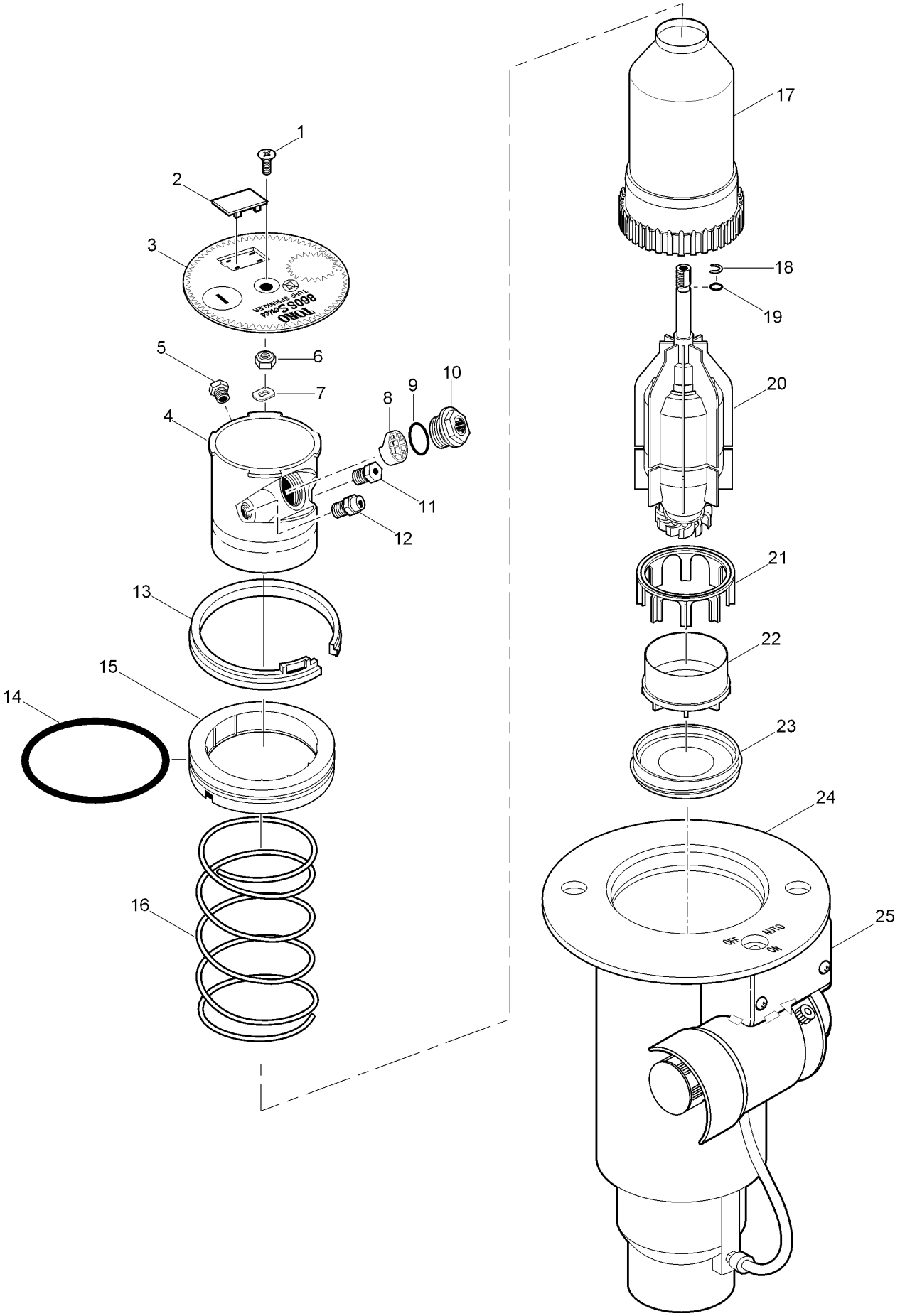

860S Series Sprinkler (continued)

Ref.	Part Number	Qty.	Description
1	102-1950	1	Screw, Cap, Stainless Steel, Full-Circle Models
1	363-4125	1	Screw, Cap, Black, Part-Circle Models
2	89-1589	1	Plug, Cap (Black)
3	102-1947	1	Cap, 860S
3	102-2082	1	Cap, 860S, Effluent
4	102-2153	1	Nozzle Base Assembly
5	102-0840	1	Nozzle, Inner/Intermediate, Blank, Red
6	363-4039	1	Nut, 5/16-24, W/ Nylon Lock
7	102-1951	1	Alignment Washer
8	102-1949	1	Stream Straightener
9	363-4978	1	O-Ring, Main Nozzle
10	102-0725	1	Nozzle, Main, #31, Yellow
10	102-0726	1	Nozzle, Main, #32, Blue
10	102-0727	1	Nozzle, Main, #33, Brown
10	102-0728	1	Nozzle, Main, #34, Orange
10	102-0729	1	Nozzle, Main, #55, Green
10	102-0730	1	Nozzle, Main, #36, Gray
10	102-4261	1	Nozzle, Main, #37, Black
11	102-0608	1	Nozzle, Intermediate, Orange (Use W/ #1 Main)
11	102-0609	1	Nozzle, Intermediate, Gray (Use W/ #2 Main)
11	102-0610	1	Nozzle, Intermediate, Red (Use W/ #3 & #4 Mains)
11	102-0823	1	Nozzle, Intermediate, Beige (Use W/ #5 & #6 Mains)
11	102-2005	1	Nozzle, Intermediate, Red (Use W/ #7 Main)
12	102-2980	1	Nozzle Assy. Inner, Red (W/ Restrictor)
13	89-1385	1	Snap Ring, Riser
14	363-4102	1	O-Ring, Paraffin As-568 232
15	102-0134	1	Retainer, Seal
16	102-0151	1	Spring, Return
17	89-6360	1	Riser Assembly
18	102-2039	1	Support Washer
19	360-0497	1	O-Ring
20	102-4499	1	Drive Assembly, Pc, (Includes Items 18 & 19), 12-Pack
20	102-4498	1	Drive Assembly, Fc, (Includes Items 18 & 19), 12-Pack
21	89-1958	1	Stator Support
22	89-1957	1	Stator, Variable
23	89-1588	1	Screen
24		1	Body Assembly (See Golf Sprinkler Body Assembly Section) ❍ ◆
25		1	Pilot Valve Assembly (See Pilot Valve Assembly Section) ❑ ◆
	102-2208		Nozzle, Main, #30, Blank, White ● ▲
	102-0840		Nozzle, Inner/Intermediate, Blank, Red ● ▲
	102-2135		Nozzle, Inner, Back, High Flow, White ● ▲
	102-2136		Nozzle, Inner, Back, Low Flow, Yellow ● ▲
	363-4220		Screw, Radius Adjust ● ▲
	102-2506		Cap, 860S, W/O Graphics ● ▲
	102-2507		Cap, 860S, W/O Graphics, Effluent ● ▲
	YARDMARKYEL10		Yardage Marker, Yellow (10-Sheets Per Pack) ● ▲
	YARDMARKLAV10		Yardage Marker, Lavender (For Non-Potable Water Applications) ● ▲
	995-08		Valve Removal Tool ■ ▲
	995-15		Selector Tool (Flag Key) ■ ▲
	995-76		Valve Insertion Tool ■ ▲
	995-79		Nut Driver, 7/16" (For Inner And Intermediate Nozzles) ■ ▲
	995-80		Nut Driver, 1/2" ■ ▲
	995-82		Adjustment Tool, 3/32" (T-Handle Hex Wrench) ■ ▲
	995-83		Multi-Purpose Tool ■ ▲
	995-85		Riser Removal Tool ■ ▲
	995-99		Nut Driver, 5/8" (For Main Nozzle) ■ ▲
	995-100		Valve Snap Ring Pliers With Screen Remover ■ ▲
	995-102		Riser Hold-Up Tool, Universal ■ ▲
	118-0954	1	Riser Hold-Up Tool, Red ■ ▲

● SERVICE ITEMS
▲ Not illustrated
❑ See Pilot Valve Assembly Section.
■ SERVICE TOOLS
◆ Not serviced separately
❍ See Golf Sprinkler Body Assembly Section.

880S Series Sprinkler

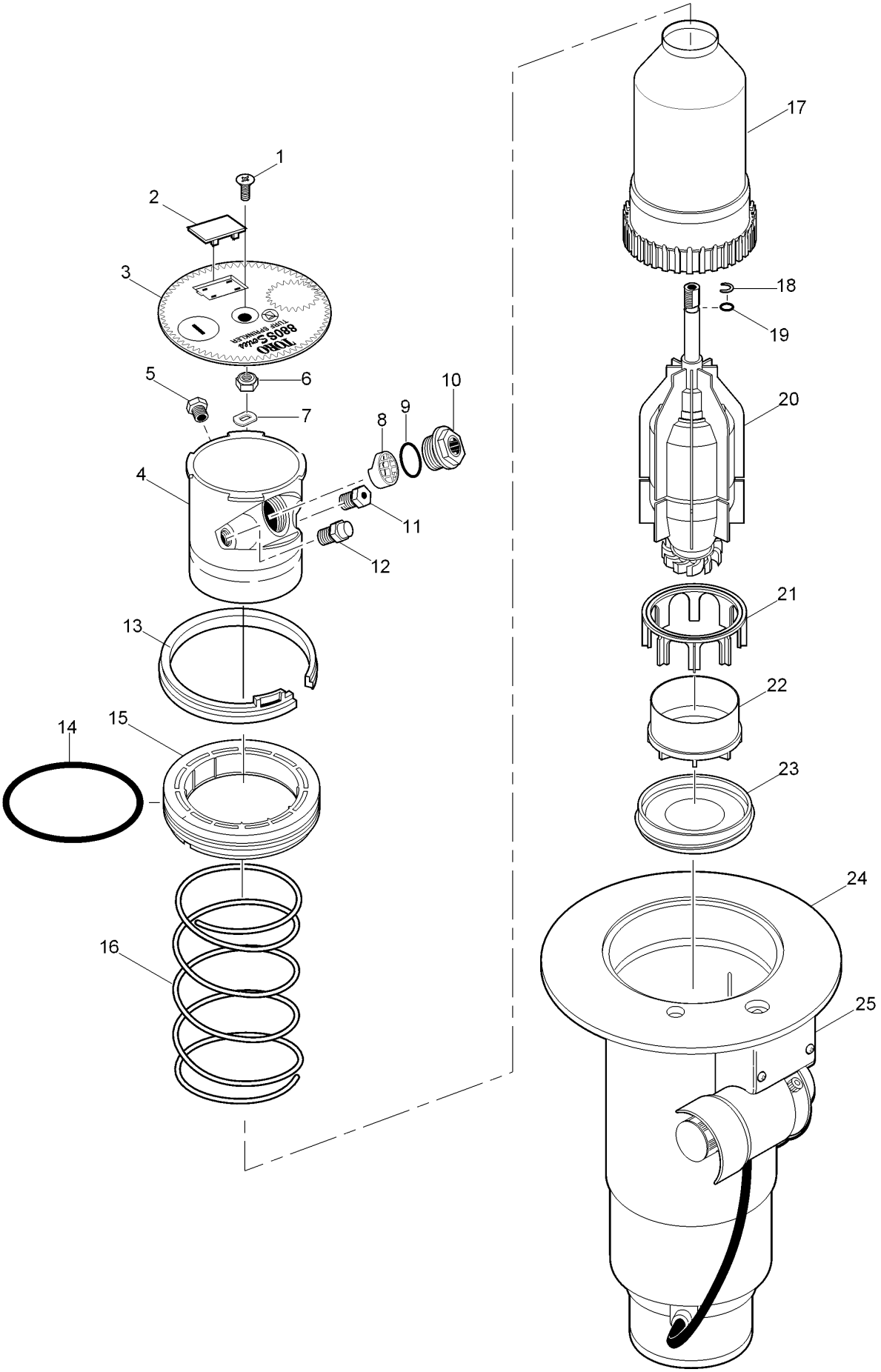

880S Series Sprinkler (continued)

Ref.	Part Number	Qty.	Description
1	102-1950	1	Screw, Cap, Stainless Steel, Full-Circle Models
1	363-4125	1	Screw, Cap, Black, Part-Circle Models
2	89-1589	1	Plug, Cap (Black)
3	102-1948	1	Cap, 880S
3	102-2083	1	Cap, 880S, Effluent
4	102-2153	1	Nozzle Base Assembly
5	102-0840	1	Nozzle, Inner/Intermediate, Blank, Red
6	363-4039	1	Nut, 5/16-24, W/ Nylon Lock
7	102-1951	1	Alignment Washer
8	102-1949	1	Stream Straightener
9	363-4978	1	O-Ring, Main Nozzle
10	102-0725	1	Nozzle, Main, #31, Yellow
10	102-0726	1	Nozzle, Main, #32, Blue
10	102-0727	1	Nozzle, Main, #33, Brown
10	102-0728	1	Nozzle, Main, #34, Orange
10	102-0729	1	Nozzle, Main, #55, Green
10	102-0730	1	Nozzle, Main, #36, Gray
10	102-4261	1	Nozzle, Main, #37, Black
10	102-4260	1	Nozzle, Main, #58, Red
11	102-0608	1	Nozzle, Intermediate, Orange (Use W/ #1 Main)
11	102-0609	1	Nozzle, Intermediate, Gray (Use W/ #2 Main)
11	102-0610	1	Nozzle, Intermediate, Red (Use W/ #3 & #4 Mains)
11	102-0823	1	Nozzle, Intermediate, Beige (Use W/ #5 & #6 Mains)
11	102-2005	1	Nozzle, Intermediate, Red (Use W/ #7 & #8 Mains)
12	102-2980	1	Nozzle Assy. Inner, Red (W/ Restrictor)
13	35-6119	1	Snap Ring, Riser
14	363-4103	1	O-Ring, Body
15	102-0136	1	Retainer, Seal, 1.5"
16	102-0151	1	Spring, Return
17	89-6361	1	Riser Assembly, 880S
18	102-2039	1	Support Washer
19	360-0497	1	O-Ring
20	102-4499	1	Drive Assembly, Pc, (Includes Items 18 & 19), 12-Pack
20	102-4498	1	Drive Assembly, Fc, (Includes Items 18 & 19), 12-Pack
21	89-1958	1	Stator Support
22	89-1957	1	Stator, Variable
23	89-1588	1	Screen
24		1	Body Assembly (See Golf Sprinkler Body Assembly Section) ❍ ◆
25		1	Pilot Valve Assembly (See Pilot Valve Assembly Section) ❑ ◆
	102-2208		Nozzle, Main, #30, Blank, White ● ▲
	102-0840		Nozzle, Inner/Intermediate, Blank, Red ● ▲
	102-2135		Nozzle, Inner, Back, High Flow, White ● ▲
	102-2136		Nozzle, Inner, Back, Low Flow, Yellow ● ▲
	363-4220		Screw, Radius Adjust ● ▲
	102-2508		Cap, 880S, W/O Graphics ● ▲
	102-2509		Cap, 880S, W/O Graphics, Effluent ● ▲
	102-0950		Adapter, Conversion ● ▲
	YARDMARKYEL10		Yardage Marker, Yellow (10-Sheets Per Pack) ● ▲
	YARDMARKLAV10		Yardage Marker, Lavender (For Non-Potable Water Applications) ● ▲
	995-09		Valve Removal Tool ■ ▲
	995-101		Valve Insertion Tool ■ ▲
	995-15		Selector Tool (Flag Key) ■ ▲
	995-79		Nut Driver, 7/16" (For Inner And Intermediate Nozzles) ■ ▲
	995-99		Nut Driver, 5/8" (For Main Nozzle) ■ ▲
	995-83		Multi-Purpose Tool ■ ▲
	995-85		Riser Removal Tool ■ ▲
	995-100		Valve Snap Ring Pliers With Screen Remover ■ ▲
	995-102		Riser Hold-Up Tool, Universal ■ ▲
	118-0954	1	Riser Hold-Up Tool, Red ■ ▲

● SERVICE ITEMS
▲ Not illustrated
❑ See Pilot Valve Assembly Section.
■ SERVICE TOOLS
◆ Not serviced separately
❍ See Golf Sprinkler Body Assembly Section.

730 Series

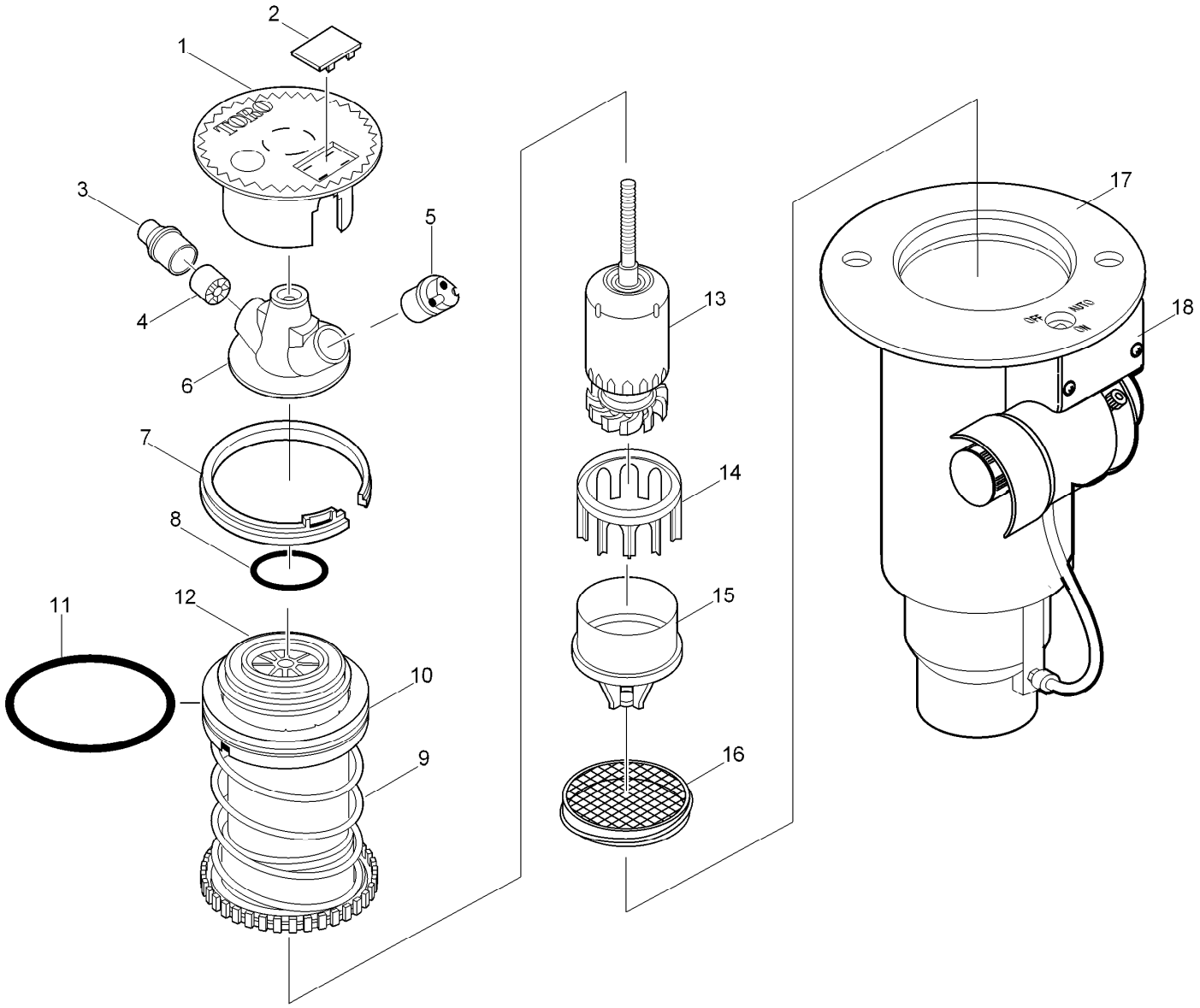

730 Series (continued)

Ref.	Part Number	Qty.	Description
1	89-1293	1	Cap
2	89-1589	1	Plug, Cap (Black)
3	89-8780	1	Nozzle, Main, 31, Yellow (Includes Item 4)
3	89-8781	1	Nozzle, Main, 32, Orange (Includes Item 4)
3	89-8782	1	Nozzle, Main, 33, Brown (Includes Item 4)
3	89-8783	1	Nozzle, Main, 34, Blue (Includes Item 4)
3	89-8784	1	Nozzle, Main, 35, Green (Includes Item 4)
3	89-8785	1	Nozzle, Main, 36, Red (Includes Item 4)
3	89-8786	1	Nozzle, Main, 37, Gray (Includes Item 4)
4	9-4098	1	Insert, Nozzle
5	102-5003	1	Nozzle Assembly., Inner, 31-37, Quad, Red
6	89-8907	1	Base Assy., Nozzle (Includes Nozzle Base And Insert Bearing)
7	89-1385	1	Snap Ring, Riser
8	363-4167	1	O-Ring, Nozzle Base
9		1	Riser Assy. (See Service Item 89-7562) ◆
10		1	Retainer, Spring (See Service Item 89-5979) ◆
11	363-4102	1	O-Ring, Paraffin As-568 232
12	89-1386	1	Retainer, Riser
13	102-4502	1	Drive Assy., 12-Pack
14	89-1390	1	Housing, Stator
15	89-9636	1	Stator, Variable, 31-34, Manila
15	89-9637	1	Stator, Variable, 35-36, Black
15	89-9622		Stator, Variable, 37, Green
16	89-6495	1	Screen
17		1	Body Assy. (See Golf Sprinkler Body Assembly Section) ❍ ◆
18		1	Pilot Valve Assembly (See Pilot Valve Assembly Section) ❑ ◆
	102-1870		Nozzle Assy., Less Cap, 734-33 (Includes Items 3-6) ● ▲
	102-1871		Nozzle Assy., Less Cap, 734-34 (Includes Items 3-6) ● ▲
	102-1735		Nozzle Assy., Less Cap, 734-35 (Includes Items 3-6) ● ▲
	102-1736		Nozzle Assy., Less Cap, 734-36 (Includes Items 3-6) ● ▲
	102-1737		Nozzle Assy., Less Cap, 734-37 (Includes Items 3-6) ● ▲
	89-5979		Seal Kit, 730 (Inlcudes Items 10-12) ● ▲
	89-7562		Riser Assy. W/Screen, 730 Svc. (Includes Items 9-12 & 16) ● ▲
	YARDMARKYEL10		Yardage Marker, Yellow (10-Sheets Per Pack) ● ▲
	YARDMARKLAV10		Yardage Marker, Lavender (For Non-Potable Water Applications) ● ▲
	89-8289		Cap, Effluent ● ▲
	995-15		Selector Tool (Flag Key) ■ ▲
	995-100		Valve Snap Ring Pliers With Screen Remover ■ ▲
	995-08		Valve Removal Tool ■ ▲
	996-76		Valve Insertion Tool ■ ▲
	995-83		Multi-Purpose Tool ■ ▲

● SERVICE ITEMS
▲ Not illustrated
❑ See Pilot Valve Assembly Section.
■ SERVICE TOOLS
◆ Not serviced separately
❍ See Golf Sprinkler Body Assembly Section.

760 Series Golf Sprinkler

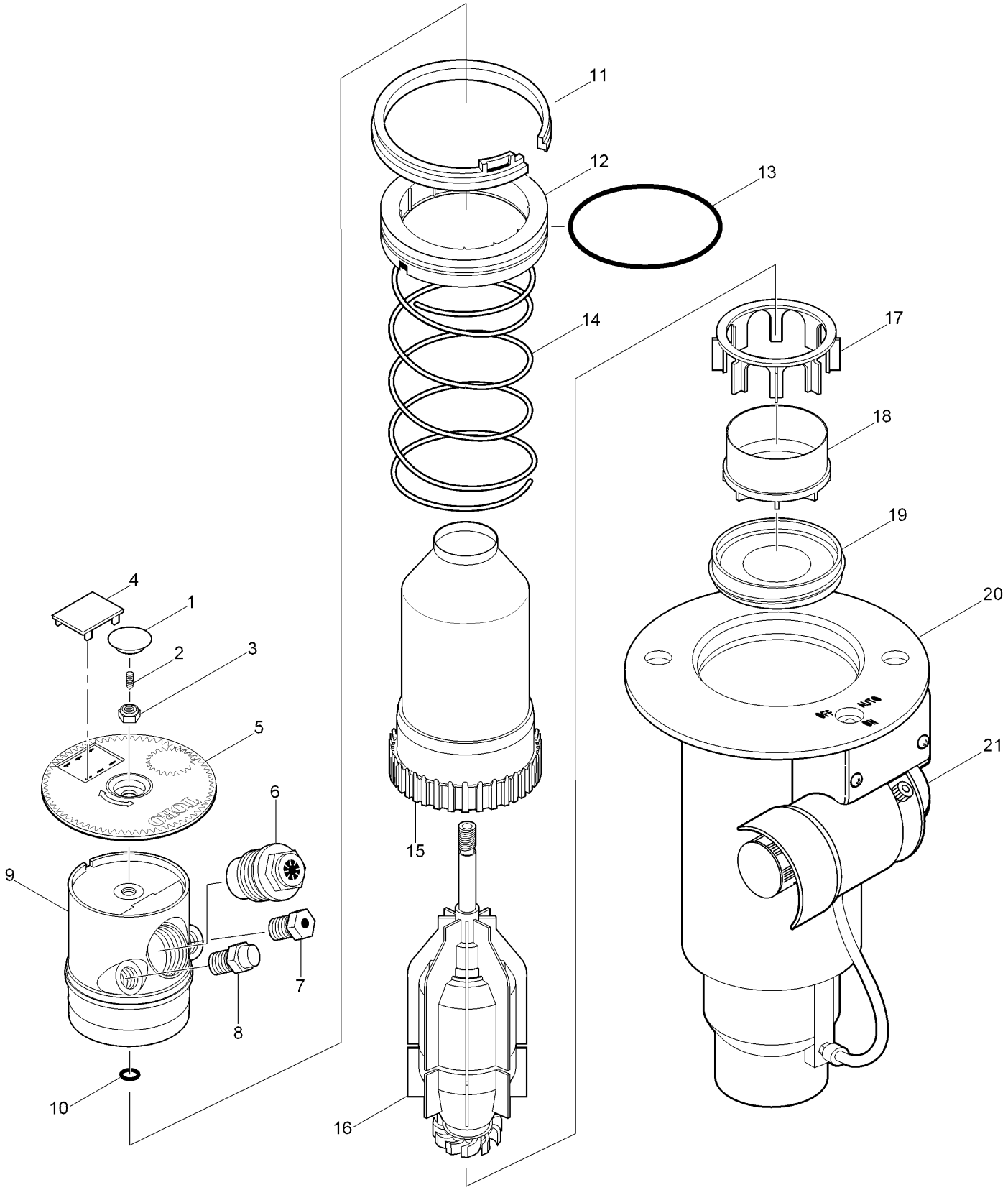

760 Series Golf Sprinkler (continued)

Ref.	Part Number	Qty.	Description
1	89-1220	1	Plug, Adjustment
2	363-3150	1	Screw, Set, 10-32 X .250 (Part Circle Models Only)
3	363-4039	1	Nut, 5/16-24, W/ Nylon Lock
4	89-1589	1	Plug, Cap (Black)
5	89-1952	1	Cap, 760
5	89-8287	1	Cap, Effluent
6	89-1925	1	Nozzle, Main, 62 Yellow
6	89-1926	1	Nozzle, Main, 63 Blue
6	89-1927	1	Nozzle, Main, 64 Brown
6	89-1928	1	Nozzle, Main, 65 Orange
6	89-1929	1	Nozzle, Main, 66 Green
6	89-1930	1	Nozzle, Main, 67 Gray
6	89-1931	1	Nozzle, Main, 68 Black
7	102-2925	1	Nozzle Assy. Intermediate, Blue (Used W/ #62 Yellow & #63 Blue Mains)
7	102-0608	1	Nozzle, Intermediate, Orange (Used W/ #64 Brown Main)
7	102-0609	1	Nozzle, Intermediate, Gray (Used W/ #65 Orange Main)
7	102-0610	1	Nozzle, Intermediate, Red (Use W/ #66 Green & #67 Gray Mains)
7	102-2929	1	Nozzle, Intermediate, Beige (Used W/ #68 Black Main)
8	102-2980	1	Nozzle Assy. Inner, Red (W/ Restrictor)
9	89-1906	1	Nozzle Base Assy., 760/780
9	102-0057	1	Nozzle Base Assy., 760/780 W/Back Nozzle (Includes 89-3729 Nozzle, Inner 85 Orange & 89-4650 Restrictor)
10	360-0107	1	O-Ring (0.070 X 0.301 X 0.441)
11	89-1385	1	Snap Ring, Riser
12	102-0134	1	Retainer, Seal
13	363-4102	1	O-Ring, Paraffin As-568 232
14	89-6307	1	Spring, Return
15	89-6360	1	Riser Assembly
16	102-4497	1	Drive Assy., Part Circle (Pc), 12-Pack
16	102-4496	1	Drive Assy., Full Circle (Fc), 12-Pack
17	89-1958	1	Stator Support
18	89-1957	1	Stator, Variable
19	89-1588	1	Screen
20		1	Body Assembly (See Golf Sprinkler Body Assembly Section) ❍ ◆

Ref.	Part Number	Qty.	Description
21		1	Pilot Valve Assembly (See Pilot Valve Assembly Section) ❑ ◆
	363-3125		Plug ● ▲
	102-0840		Nozzle, Inner/Intermediate, Blank, Red ● ▲
	89-4651		Nozzle, Inner, 82 Yellow (Pre-November 2003) ● ▲
	89-3942		Nozzle, Inner, 83 Blue (Pre-November 2003) ● ▲
	89-4652		Nozzle, Inner, 84 Brown (Pre-November 2003) ● ▲
	89-3729		Nozzle, Inner, 85 Orange (Pre-November 2003) ● ▲
	89-4653		Nozzle, Inner, 86 Green (Pre-November 2003) ● ▲
	89-1879		Nozzle, Inner, 87 Gray (Pre-November 2003) ● ▲
	89-4654		Nozzle, Inner, 88 Black (Pre-November 2003) ● ▲
	89-4649		Restrictor, (82 & 83 Black) (Pre-November 2003) ● ▲
	89-4650		Restrictor, (84-89 White) (Pre-November 2003) ● ▲
	YARDMARKYEL10		Yardage Marker, Yellow (10-Sheets Per Pack) ● ▲
	YARDMARKLAV10		Yardage Marker, Lavender (For Non-Potable Water Applications) ● ▲
	995-08		Valve Removal Tool ■ ▲
	995-15		Selector Tool (Flag Key) ■ ▲
	995-55		Riser Hold-Up Tool ■ ▲
	995-76		Valve Insertion Tool ■ ▲
	995-79		Nut Driver, 7/16" (For Inner And Intermediate Nozzles) ■ ▲
	995-80		Nut Driver, 1/2" (For 363-4039 Lock Nut) ■ ▲
	995-81		Nut Driver, 9/16" (For Main Nozzle) ■ ▲
	995-82		Adjustment Tool, 3/32" (T-Handle Hex Wrench) ■ ▲
	995-83		Multi-Purpose Tool ■ ▲
	995-85		Riser Removal Tool ■ ▲
	995-100		Valve Snap Ring Pliers With Screen Remover ■ ▲
	118-0954	1	Riser Hold-Up Tool, Red ■ ▲

● SERVICE ITEMS
▲ Not illustrated
❑ See Pilot Valve Assembly Section.
■ SERVICE TOOLS
◆ Not serviced separately
❍ See Golf Sprinkler Body Assembly Section.

650 Series

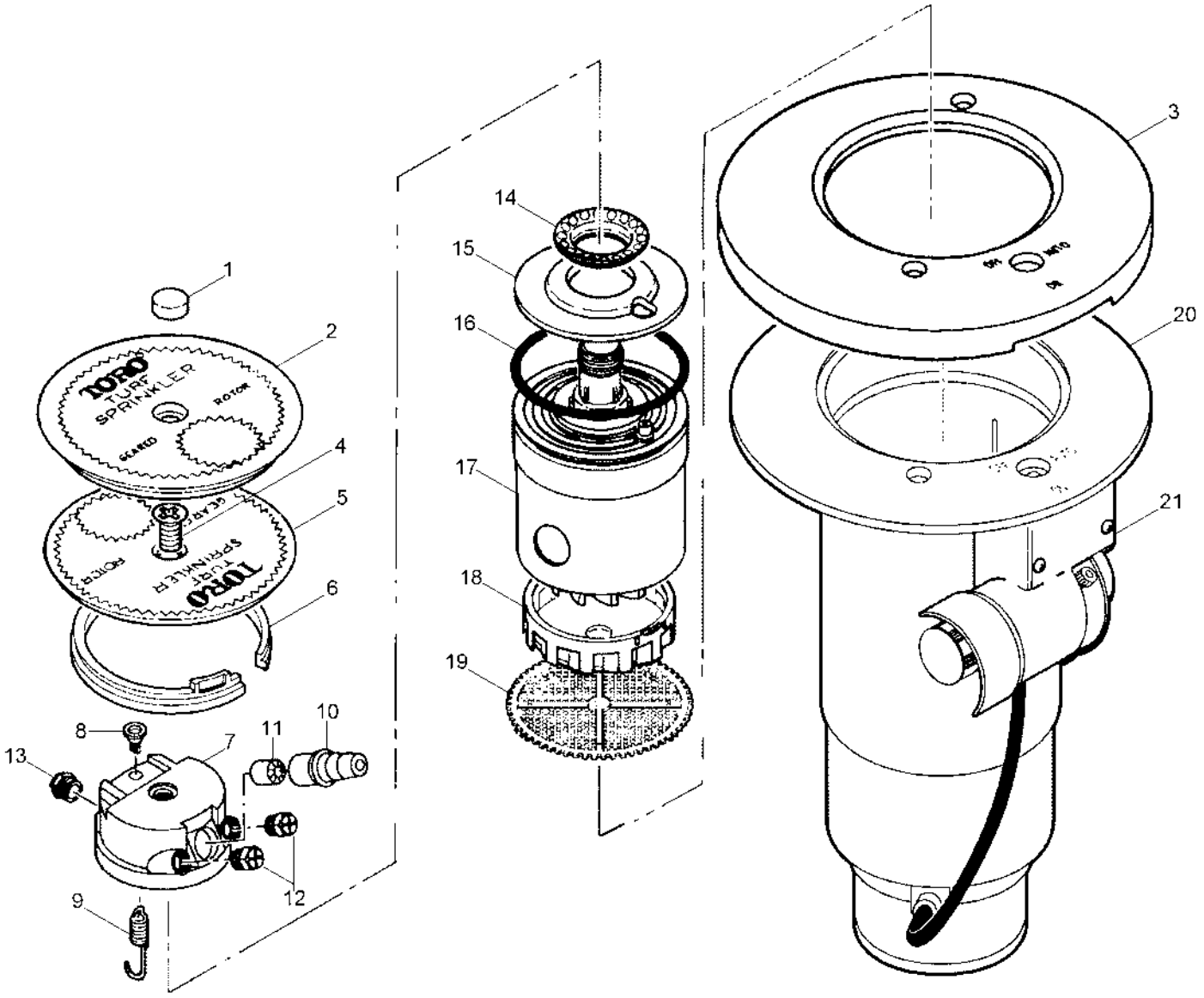
1
2
3
4
5
6
7
8
9
10
11
12
13
14
15
16
17
18
19
20
21
TORO
TURF
SPRINKLER
ROTOR
GEARED

650 Series (continued)

Ref.	Part Number	Qty.	Description
1	3-2095	1	Plug, Cap, Rubber Cover
2	35-8563	1	Cap Assy., Rubber Cover
3	9-5355	1	Rubber Cover, Rounded Flange (See Service Item 650-02)
4	3-2510	1	Screw, Machine, 5/16-18 X 11/16"
5	89-8461	1	Cap
6	35-6119	1	Snap Ring, Riser
7		1	Nozzle Base Assy., 656 (See Service Item 35-7638) ◆
7		1	Nozzle Base Assy., 658 (See Service Item 35-4853 Or 35-4852) ◆
8	35-5846	1	Retainer, Spring
9	35-6289	1	Spring, Nozzle
10	35-7658	1	Nozzle, Main, #54 (Includes Item 11)
10	35-7659	1	Nozzle, Main, #55 (Includes Item 11)
10	35-7660	1	Nozzle, Main, #56 (Includes Item 11)
10	35-7661	1	Nozzle, Main, #57 (Includes Item 11)
10	35-7662	1	Nozzle, Main, #58 (Includes Item 11)
10	35-9839	1	Nozzle, Main, #59
11	89-5819	1	Insert, Nozzle (Not Used W/ #59 Nozzle)
12	89-3942	1	Nozzle, Inner, 83 Blue (Pre-November 2003)
12	89-4738	1	Nozzle, Inner, Red
13	89-4785	1	Nozzle, Back, Green (658 Models Only)
14	9-2735	1	Collar, Spring
15	3-2093	1	Plate, Retainer
16	363-4103	1	O-Ring, Body
17	89-4842	1	Drive Assy., 656, 54-57 Nozzles, 2-Speed 60-120° (Color Coded Red) (Includes Items 14 & 15)
17	89-1295	1	Drive Assy., 656, 58-59 Nozzles, 2-Speed 60-120° (Color Coded Red) (Includes Items 14 & 15)
17	89-4843	1	Drive Assy., 658, 54-57 Nozzles, 2-Speed 180-180° (Color Coded Yellow) (Includes Items 14 & 15)
17	89-1296	1	Drive Assy., 658, 58-59 Nozzles, 2-Speed 180-180° (Color Coded Yellow) (Includes Items 14 & 15)
18	9-5187	1	Stator, 34/59 (Used W/ 651-59, 652-59, 654-59, 656-59 & 658-59)
18	9-5188	1	Stator, 54 (Used W/ 651-54, 652-54, 654-54, 655-54, 656-54 & 658-54)
18	9-5186	1	Stator, 55/56 (Used W/ 651-55, 652-55, 654-55, 655-55, 656-55, 658-55, 651-56, 652-56, 655-56, 656-56 & 658-56)
18	9-5190	1	Stator, 57 (Used W/651-57, 652-57, 654-57, 655-57, 656-57 & 658-57)
18	9-5192	1	Stator, 58 (Used W/ 651-58, 652-58, 654-58, 655-58, 656-58 & 658-58)
19	35-1106	1	Screen, Molded
20		1	Body Assy. (See Golf Sprinkler Body Assembly Section) ❍ ◆
21		1	Pilot Valve Assembly (See Pilot Valve Assembly Section) ❑ ◆
	650-02		Kit, Rubber Cover (Includes Items 1-3) ● ▲
	35-7638		Nozzle Assy., W/O Main Nozzle, 650 (Includes Items 4, 5, 7, 8, 9 & 12) ● ▲
	89-4795		Nozzle Assy., W/O Main Nozzle And Cap, 650 (Includes Items 7, 8, 9 & 12) ● ▲
	89-4852		Nozzle Assy., W/O Main Nozzle, 658 (Includes Items 4, 5, 7, 8, 9, 12 & 13) ● ▲
	89-4853		Nozzle Assy., W/O Main Nozzle And Cap, 658 (Includes Items 7, 8, 9, 12 & 13) ● ▲
	89-4852	1	Nozzle Assy., W/Cap, W/O Main Nozzle (Includes Items 4, 5, 7-9, 12 And 13) ● ▲
	102-0840		Nozzle, Inner/Intermediate, Blank, Red ● ▲
	363-3397		Plug, Da, 7/16", 52-57 Nozzles ● ▲
	363-3398		Plug, Da, 13/16", 58-59 Nozzles ● ▲
	995-09		Valve Removal Tool ■ ▲
	995-06		Drive ASM Extraction Tool ■ ▲
	995-15		Selector Tool (Flag Key) ■ ▲
	995-16		Riser Pliers ■ ▲
	995-18		Spring Collar Installation Tool ■ ▲
	995-79		Nut Driver, 7/16" (For Inner And Intermediate Nozzles) ■ ▲
	995-83		Multi-Purpose Tool ■ ▲

● SERVICE ITEMS
▲ Not illustrated
❑ See Pilot Valve Assembly Section.
■ SERVICE TOOLS
◆ Not serviced separately
❍ See Golf Sprinkler Body Assembly Section.

650 Series (continued)

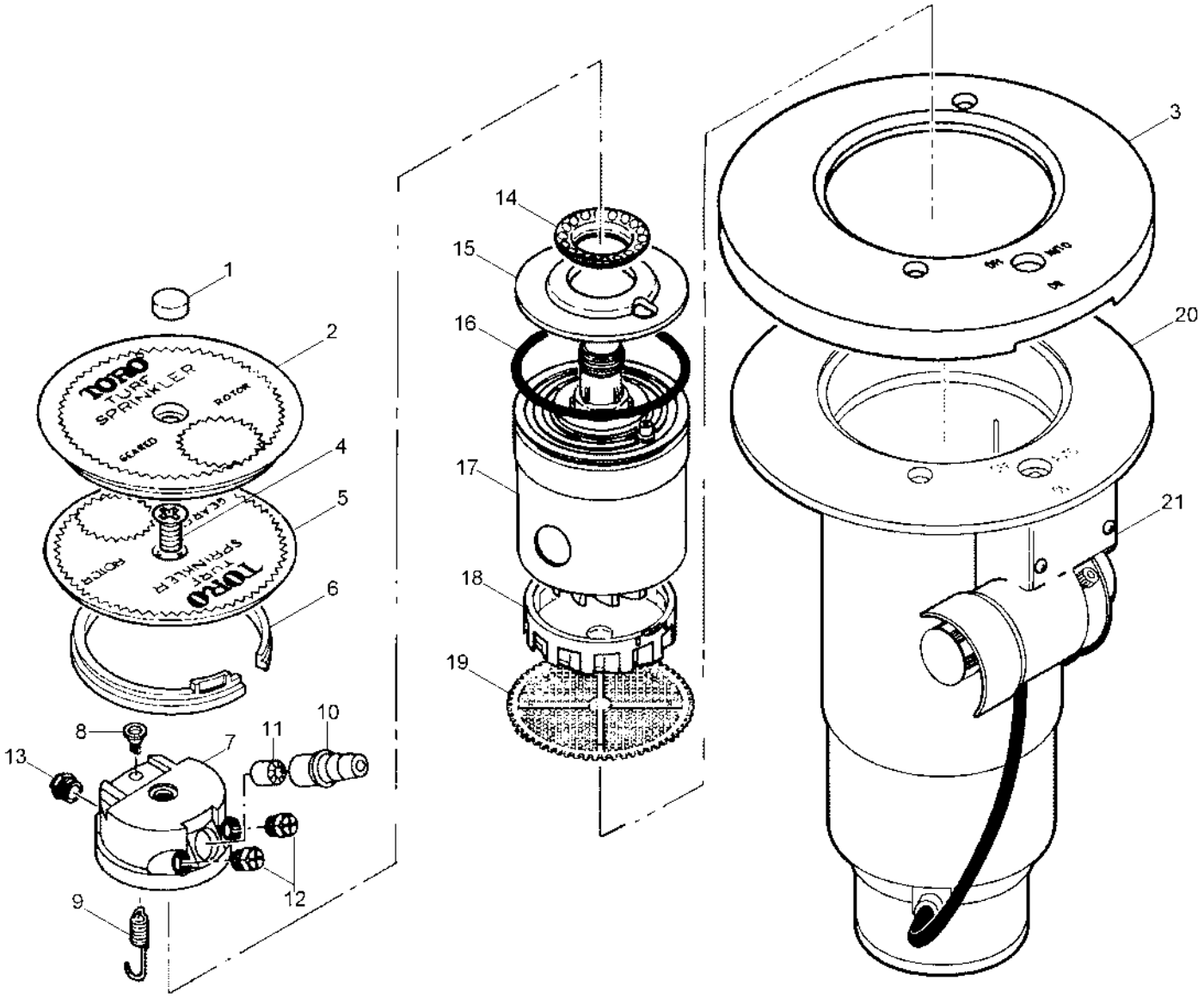

● SERVICE ITEMS
▲ Not illustrated
❑ See Pilot Valve Assembly Section.

■ SERVICE TOOLS
◆ Not serviced separately
❍ See Golf Sprinkler Body Assembly Section.

750 Series Golf Sprinklers

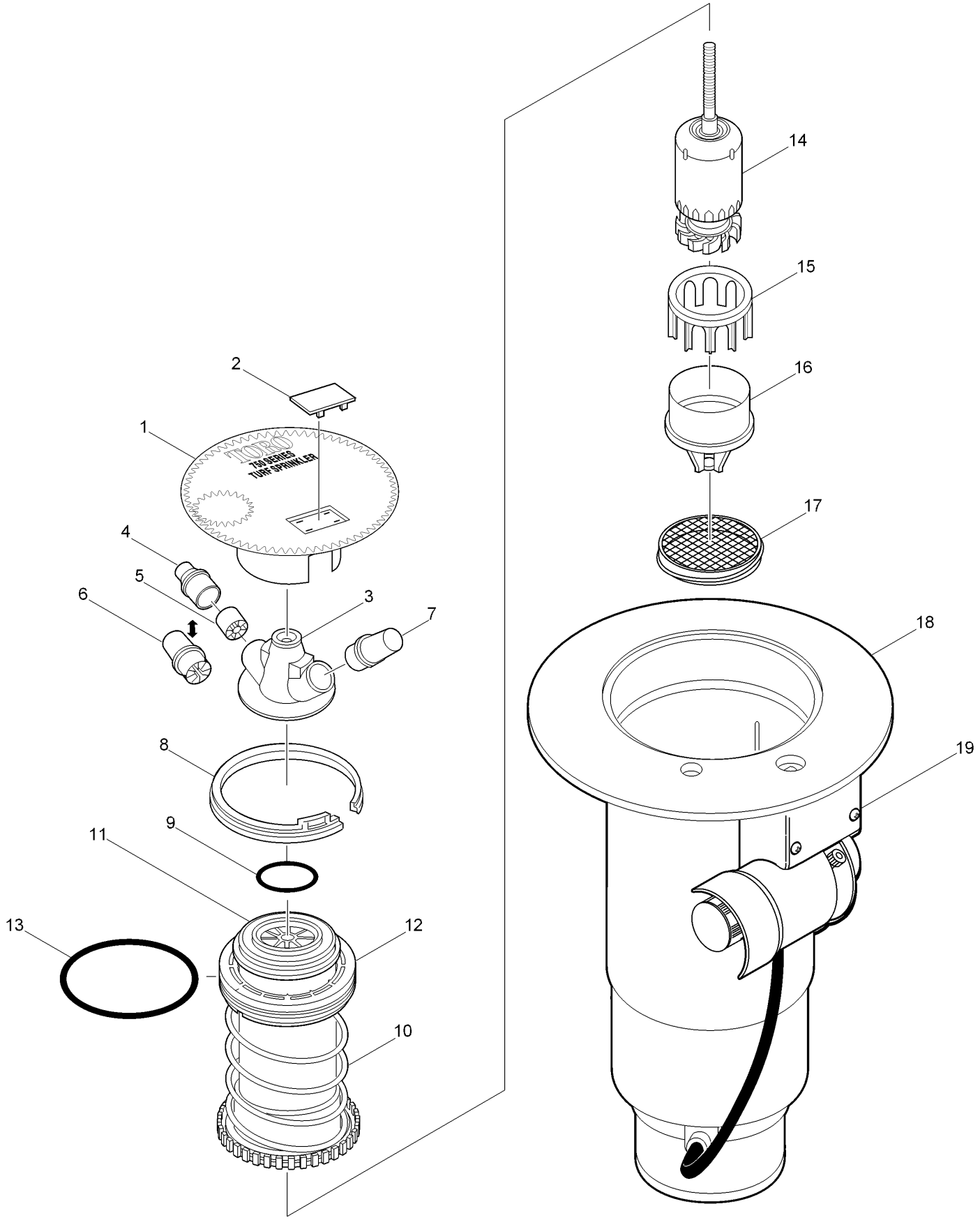

750 Series Golf Sprinklers (continued)

Ref.	Part Number	Qty.	Description
1	89-4812	1	Cap
1	89-8290	1	Cap, Effluent
2	89-1589	1	Plug, Cap (Black)
3	89-8907	1	Base Assy., Nozzle (Includes Nozzle Base And Insert Bearing)
4	89-8781	1	Nozzle, Main, 32, Orange (Includes Item 5)
4	89-8782	1	Nozzle, Main, 33, Brown (Includes Item 5)
4	89-8783	1	Nozzle, Main, 34, Blue (Includes Item 5)
5	9-4098	1	Insert, Nozzle
6	89-8969	1	Nozzle, Main, 55, Green, Long (Includes Item 5)
6	89-8701	1	Nozzle, Main, 56, Red, Long
6	89-8702	1	Nozzle, Main, 57, Gray, Long
6	89-8614	1	Nozzle, Main, 58, Beige, Long
6	89-8615	1	Nozzle, Main, 59, Black, Long
7	89-8715	1	Nozzle, Inner, 52-54, Red
7	89-8373	1	Nozzle, Inner, 55-59, Black
8	35-6119	1	Snap Ring, Riser
9	363-4167	1	O-Ring, Nozzle Base
10		1	Riser Assembly (See Service Item 89-7563) ◆
11	89-1386	1	Retainer, Riser
12		1	Retainer, Spring (See Service Item 89-4352) ◆
13	363-4103	1	O-Ring, Body
14	102-4502	1	Drive Assy., 12-Pack
15	89-1390	1	Housing, Stator
16	89-9636	1	Stator, Variable, 31-34, Manila
16	89-9637	1	Stator, Variable, 35-36, Black
16	89-9622	1	Stator, Variable, 37, Green
16	89-9954	1	Stator, Variable, 58-59, Red
17	89-6495	1	Screen
18		1	Body Assembly (See Golf Sprinkler Body Assembly Section) ❍ ◆
19		1	Pilot Valve Assembly (See Pilot Valve Assembly Section) ❑ ◆
	89-8916		Nozzle Assy., 754-52, Orange (Includes 1-5 & 7) ● ▲
	89-8917		Nozzle Assy., 754-53, Brown (Includes 1-5 & 7) ● ▲
	89-8918		Nozzle Assy., 754-54, Blue (Includes 1-5 & 7) ● ▲
	89-8919		Nozzle Assy., 754-55, Green (Includes 1-5 & 5-7) ● ▲
	89-8920		Nozzle Assy., 754-56, Red (Includes 1-3, 6 & 7) ● ▲
	89-8921		Nozzle Assy., 754-57, Gray (Includes 1-3, 6 & 7) ● ▲
	89-8922		Nozzle Assy., 754-58, Beige (Includes 1-3, 6 & 7) ● ▲
	89-8926		Nozzle Assy., 754-59, Black (Includes 1-3, 6 & 7) ● ▲
	89-4352		Seal Kit, 750 (Includes Items 11-13) ● ▲
	89-7563		Riser Assy. W/Screen (Includes Items 10-13 & 17) ● ▲
	35-4557		Screen, Press-In Type (Pre-9/94 Production) ● ▲
	YARDMARKYEL10		Yardage Marker, Yellow (10-Sheets Per Pack) ● ▲
	YARDMARKLAV10		Yardage Marker, Lavender (For Non-Potable Water Applications) ● ▲
	995-09		Valve Removal Tool ■ ▲
	995-15		Selector Tool (Flag Key) ■ ▲
	995-55		Riser Hold-Up Tool ■ ▲
	995-83		Multi-Purpose Tool ■ ▲
	995-85		Riser Removal Tool ■ ▲
	995-101		Valve Insertion Tool ■ ▲
	995-100		Valve Snap Ring Pliers With Screen Remover ■ ▲

● SERVICE ITEMS
▲ Not illustrated
❑ See Pilot Valve Assembly Section.
■ SERVICE TOOLS
◆ Not serviced separately
❍ See Golf Sprinkler Body Assembly Section.

780 Series Golf Sprinklers

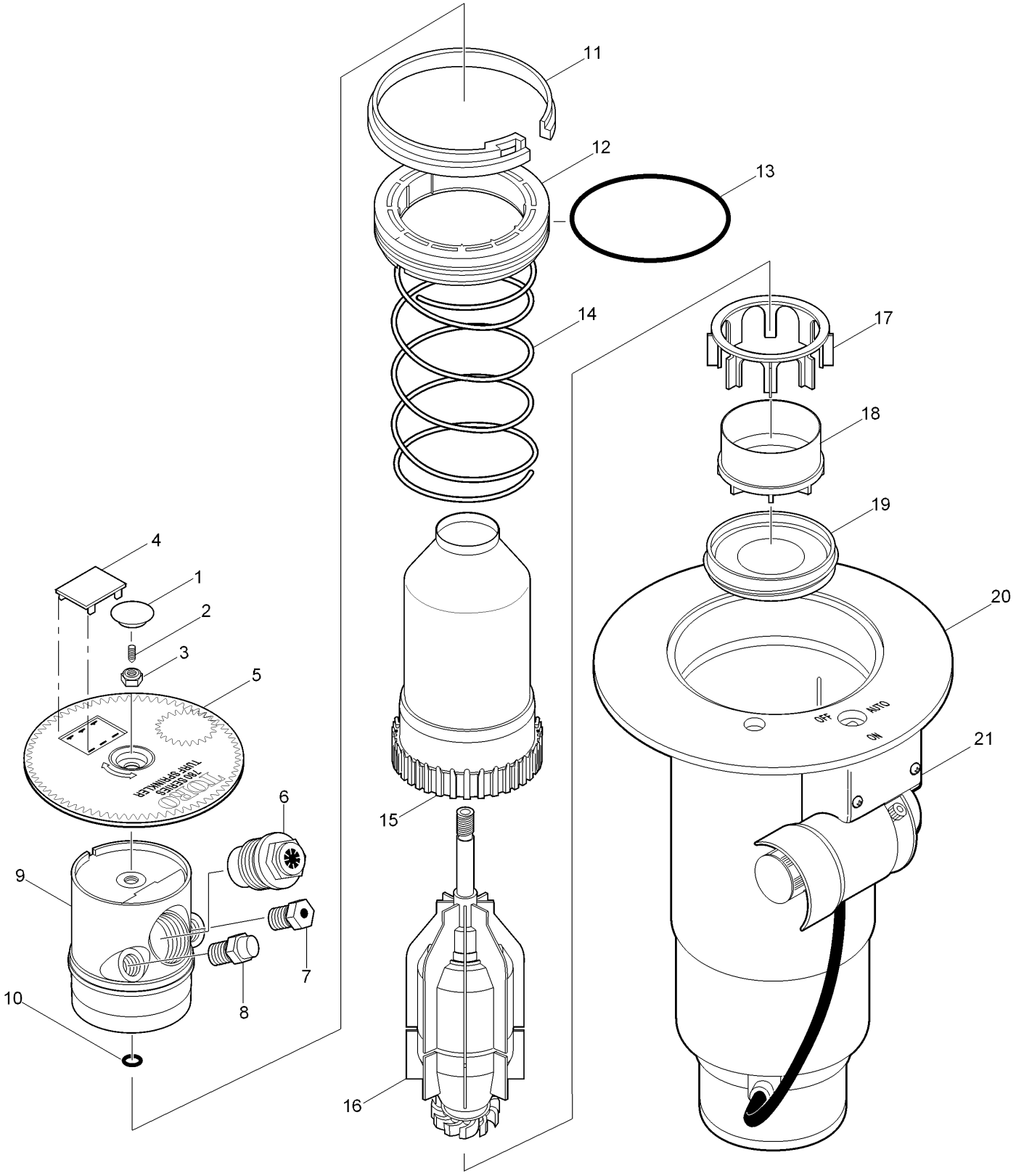

780 Series Golf Sprinklers (continued)

Ref.	Part Number	Qty.	Description
1	89-1220	1	Plug, Adjustment
2	363-3150	1	Screw, Set, 10-32 X .250 (Part Circle Only)
3	363-4039	1	Nut, 5/16-24, W/ Nylon Lock
4	89-1589	1	Plug, Cap (Black)
5	89-1584	1	Cap, 780
5	89-8288	1	Cap, Effluent
6	89-1925	1	Nozzle, Main, 62 Yellow
6	89-1926	1	Nozzle, Main, 63 Blue
6	89-1927	1	Nozzle, Main, 64 Brown
6	89-1928	1	Nozzle, Main, 65 Orange
6	89-1929	1	Nozzle, Main, 66 Green
6	89-1930	1	Nozzle, Main, 67 Gray
6	89-1931	1	Nozzle, Main, 68 Black
6	89-4655	1	Nozzle, Main, 89 Red
7	102-2925	1	Nozzle Assy. Intermediate, Blue (Used W/ #82 Yellow & #83 Blue Mains)
7	102-0608	1	Nozzle, Intermediate, Orange (Used W/ #84 Brown Main)
7	102-0609	1	Nozzle, Intermediate, Gray (Used W/ #85 Orange Main)
7	102-0610	1	Nozzle, Intermediate, Red (Use W/ #86 Green & #87 Gray Mains)
7	102-2929	1	Nozzle, Intermediate, Beige (Use W/ #88 Black & #89 Red Mains)
8	102-2980	1	Nozzle Assy. Inner, Red (W/ Restrictor)
9	89-1906	1	Nozzle Base Assy., 760/780
9	102-0057	1	Nozzle Base Assy., 760/780 W/Back Nozzle (Includes 89-3729 #85 Inner Nozzle & 89-4650 Restrictor)
10	360-0107	1	O-Ring (0.070 X 0.301 X 0.441)
11	35-6119	1	Snap Ring, Riser
12	102-0136	1	Retainer, Seal, 1.5"
13	363-4103	1	O-Ring, Body
14	89-6307	1	Spring, Return
15	89-6361	1	Riser Assembly, 880S
16	102-4497	1	Drive Assy., Part Circle (Pc), 12-Pack
16	102-4496	1	Drive Assy., Full Circle (Fc), 12-Pack
17	89-1958	1	Stator Support
18	89-1957	1	Stator, Variable
19	89-1588	1	Screen
20		1	Body Assy. (See Sprinkler Golf Body Assembly Section) ❍ ◆

Ref.	Part Number	Qty.	Description
21			Pilot Valve Assy. (See Pilot Valve Assembly Section) ❑ ◆
	363-3125		Plug ● ▲
	102-0840		Nozzle, Inner/Intermediate, Blank, Red ● ▲
	89-4651		Nozzle, Inner, 82 Yellow (Pre-November 2003) ● ▲
	89-3942		Nozzle, Inner, 83 Blue (Pre-November 2003) ● ▲
	89-4652		Nozzle, Inner, 84 Brown (Pre-November 2003) ● ▲
	89-3729		Nozzle, Inner, 85 Orange (Pre-November 2003) ● ▲
	89-4653		Nozzle, Inner, 86 Green (Pre-November 2003) ● ▲
	89-1879		Nozzle, Inner, 87 Gray (Pre-November 2003) ● ▲
	89-4654		Nozzle, Inner, 88 Black (Pre-November 2003) ● ▲
	89-1878		Nozzle, Inner, 89 Red ● ▲
	89-4649		Restrictor, (82 & 83 Black) (Pre-November 2003) ● ▲
	89-4650		Restrictor, (84-89 White) (Pre-November 2003) ● ▲
	YARDMARKYEL10		Yardage Marker, Yellow (10-Sheets Per Pack) ● ▲
	YARDMARKLAV10		Yardage Marker, Lavender (For Non-Potable Water Applications) ● ▲
	995-09		Valve Removal Tool ■ ▲
	995-15		Selector Tool (Flag Key) ■ ▲
	995-55		Riser Hold-Up Tool ■ ▲
	995-79		Nut Driver, 7/16" (For Inner And Intermediate Nozzles) ■ ▲
	995-80		Nut Driver, 1/2" (For 363-4039 Lock Nut) ■ ▲
	995-81		Nut Driver, 9/16" (For Main Nozzle) ■ ▲
	995-82		Adjustment Tool, 3/32" (T-Handle Hex Wrench) ■ ▲
	995-83		Multi-Purpose Tool ■ ▲
	995-85		Riser Removal Tool ■ ▲
	995-101		Valve Insertion Tool ■ ▲
	995-100		Valve Snap Ring Pliers With Screen Remover ■ ▲
	118-0954	1	Riser Hold-Up Tool, Red ■ ▲

● SERVICE ITEMS
▲ Not illustrated
❑ See Pilot Valve Assembly Section.
■ SERVICE TOOLS
◆ Not serviced separately
❍ See Golf Sprinkler Body Assembly Section.

780 Series Ribless Body Conversion Assembly

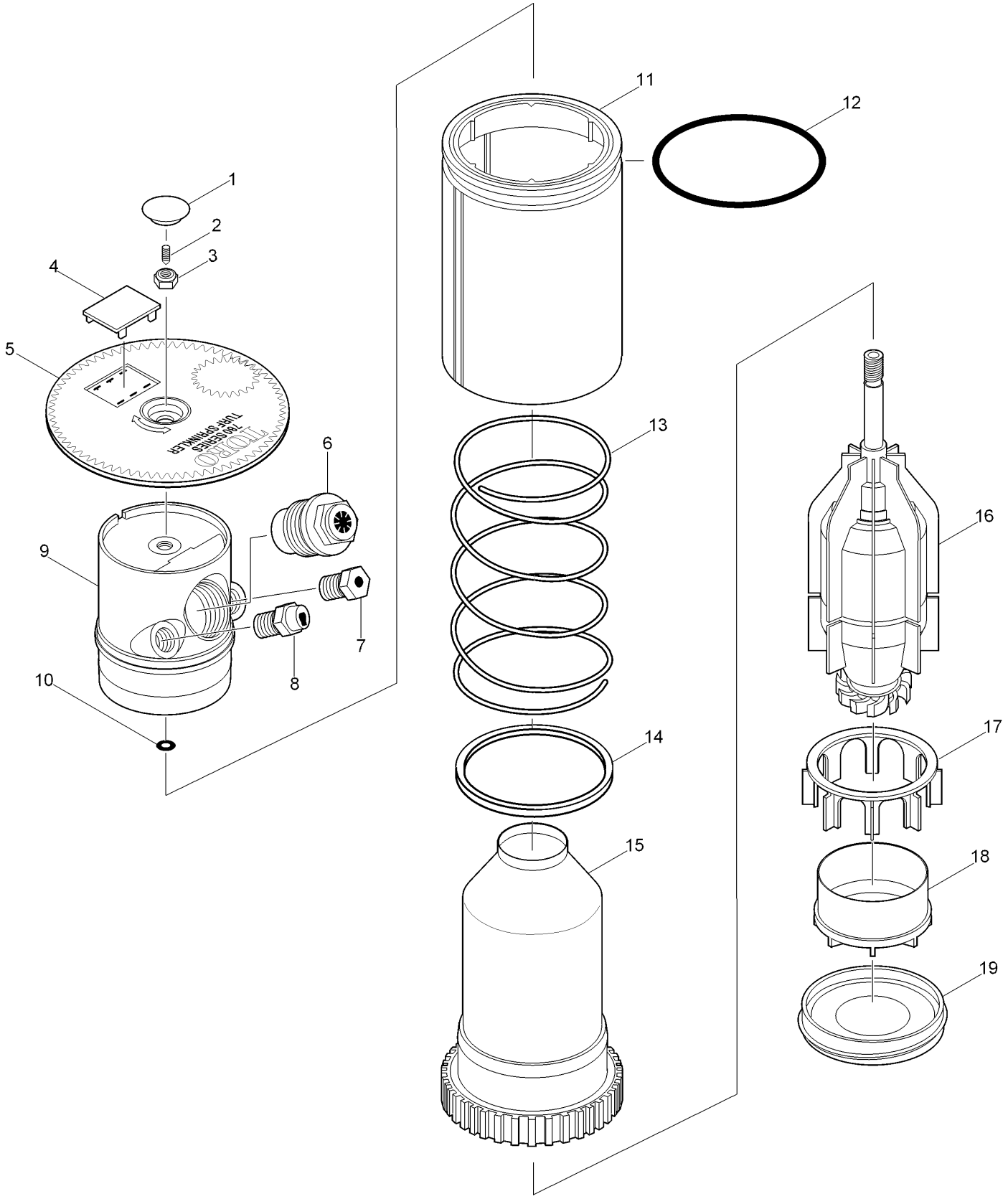

780 Series Ribless Body Conversion Assembly (continued)

Ref.	Part Number	Qty.	Description
1	89-1220	1	Plug, Adjustment
2	363-3150	1	Screw, Set, 10-32 X .250 (Part Circle Only)
3	363-4039	1	Nut, 5/16-24, W/ Nylon Lock
4	89-1589	1	Plug, Cap (Black)
5	89-1584	1	Cap, 780
5	89-8288	1	Cap, Effluent
6	89-1925	1	Nozzle, Main, 62 Yellow
6	89-1926	1	Nozzle, Main, 63 Blue
6	89-1927	1	Nozzle, Main, 64 Brown
6	89-1928	1	Nozzle, Main, 65 Orange
6	89-1929	1	Nozzle, Main, 66 Green
6	89-1930	1	Nozzle, Main, 67 Gray
6	89-1931	1	Nozzle, Main, 68 Black
6	89-4655	1	Nozzle, Main, 89 Red
7	102-2925	1	Nozzle Assy. Intermediate, Blue (Use W/ #82 Yellow & #83 Blue Main Nozzles)
7	102-0608	1	Nozzle, Intermediate, Orange (Use W/ #84 Brown Main Nozzle)
7	102-0609	1	Nozzle, Intermediate, Gray (Use W/ #84 Orange Main Nozzle)
7	102-0610	1	Nozzle, Intermediate, Red (Use W/ #86 Green & #87 Gray Main Nozzles)
7	102-2929	1	Nozzle, Intermediate, Beige (Use W/ #88 Black & #89 Red Main Nozzles)
8	102-2980	1	Nozzle Assy. Inner, Red (W/ Restrictor)
9	89-1906	1	Nozzle Base Assy., 760/780
9	102-0057	1	Nozzle Base Assy., 760/780 W/Back Nozzle
10	360-0107	1	O-Ring (0.070 X 0.301 X 0.441)
11	89-7568	1	Sleeve, Retainer, O-Ring, Conversion
12	363-4103	1	O-Ring, Body
13	89-6307	1	Spring, Return
14	89-7569	1	Seal, Riser
15	89-6360	1	Riser Assembly
16	102-4497	1	Drive Assy., Part Circle (Pc), 12-Pack
16	102-4496	1	Drive Assy., Full Circle (Fc), 12-Pack
17	89-1958	1	Stator Support
18	89-1957	1	Stator, Variable
19	89-1588	1	Screen
	363-3125		Plug ●▲
	102-0840		Nozzle, Inner/Intermediate, Blank, Red ●▲
	89-4651		Nozzle, Inner, 82 Yellow (Pre-November 2003) ●▲
	89-3942		Nozzle, Inner, 83 Blue (Pre-November 2003) ●▲
	89-4652		Nozzle, Inner, 84 Brown (Pre-November 2003) ●▲
	89-3729		Nozzle, Inner, 85 Orange (Pre-November 2003) ●▲
	89-4653		Nozzle, Inner, 86 Green (Pre-November 2003) ●▲
	89-1879		Nozzle, Inner, 87 Gray (Pre-November 2003) ●▲
	89-4654		Nozzle, Inner, 88 Black (Pre-November 2003) ●▲
	89-1878		Nozzle, Inner, 89 Red ●▲
	89-4649		Restrictor, (82 & 83 Black) (Pre-November 2003) ●▲
	89-4650		Restrictor, (84-89 White) (Pre-November 2003) ●▲
	995-09		Valve Removal Tool ■▲
	995-15		Selector Tool (Flag Key) ■▲
	995-55		Riser Hold-Up Tool ■▲
	995-79		Nut Driver, 7/16" (For Inner And Intermediate Nozzles) ■▲
	995-80		Nut Driver, 1/2" (For 363-4039 Lock Nut) ■▲
	995-81		Nut Driver, 9/16" (For Main Nozzle) ■▲
	995-82		Adjustment Tool, 3/32" (T-Handle Hex Wrench) ■▲
	995-83		Multi-Purpose Tool ■▲
	995-85		Riser Removal Tool ■▲
	995-101		Valve Insertion Tool ■▲
	995-100		Valve Snap Ring Pliers With Screen Remover ■▲
	118-0954	1	Riser Hold-Up Tool, Red ■▲

● SERVICE ITEMS
▲ Not illustrated

■ SERVICE TOOLS

670 Series Golf Sprinkler

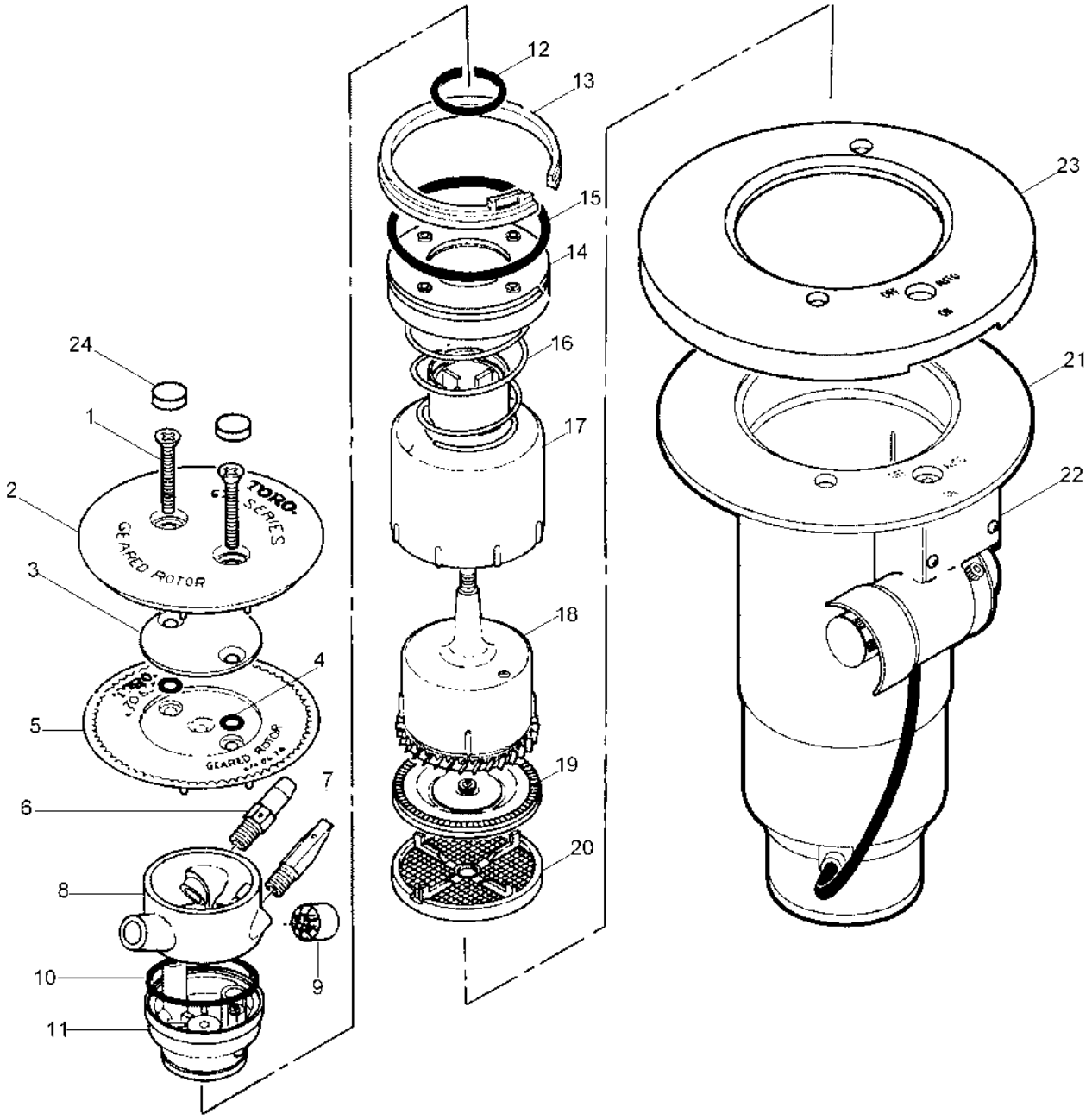

670 Series Golf Sprinkler (continued)

Ref.	Part Number	Qty.	Description
1	363-1571	2	Screw-PFH
2	9-5633	1	Cap Assy, Rubber Cover
3	9-3735	1	Plate, Cap, Insert
4	360-0107	2	O-Ring (0.070 X 0.301 X 0.441)
5	35-0530	1	Cap, Sprinkler, 670
6	9-2793	1	Nozzle, "0" Intermediate
7	9-7177	1	Nozzle, "f" Inner
8	9-7962	1	Ring, Nozzle Assy., #70 (5/16")
8	9-7963	1	Ring, Nozzle Assy., #71 (11/32")
8	9-7964	1	Ring, Nozzle Assy., #72 (3/8")
8	9-7965	1	Ring, Nozzle Assy., #73 (13/32")
8	9-7966	1	Ring, Nozzle Assy., #74 (7/16")
9	89-5813	1	Straightener, Stream
10	360-0398	1	O-Ring
11	9-7407	1	Nozzle Base Assy.
12	9-5075	1	O-Ring, Housing, Outer
13	35-6119	1	Snap Ring, Riser
14	9-5055	1	Spring Retainer & Plate Assembly
15	363-4103	1	O-Ring, Body
16	9-3737	1	Spring, Return
17	9-3874	1	Drive Assy., Outer Housing
18	9-3908	1	Drive Assy. (Includes Item 17)
19	9-4091	1	Stator, Fixed (Used W/ #70 & #71 Nozzle)
19	9-4529	1	Stator, Variable (Used W/ #72, #73 & #74 Nozzles)
20	35-3611	1	Screen, Debris
21		1	Body Assembly (See Golf Sprinkler Body Assembly Section) ❍ ◆
22		1	Pilot Valve Assembly (See Pilot Valve Assembly Section) ❑ ◆
23	9-5355	1	Rubber Cover, Rounded Flange,
24	3-2518	1	Plug-Cap , Rubber
	89-0475		670 Nozzle Assy., #70 (Includes Items 1 & 3-12) ● ▲
	9-7415		670 Nozzle Assy., #71 (Includes Items 1 & 3-12) ● ▲
	9-7416		670 Nozzle Assy., #72 (Includes Items 1 & 3-12) ● ▲
	9-7417		670 Nozzle Assy., #73 (Includes Items 1 & 3-12) ● ▲
	9-7418		670 Nozzle Assy., #74 (Includes Items 1 & 3-12) ● ▲
	35-3599		Stream Straightener, Debris Resistant ● ▲
	670-01		Kit, Rubber Cover (Includes Items 2, 23 & 24) ● ▲
	995-09		Valve Removal Tool ■ ▲
	995-15		Selector Tool (Flag Key) ■ ▲
	995-83		Multi-Purpose Tool ■ ▲
	995-100		Valve Snap Ring Pliers With Screen Remover ■ ▲
	995-101		Valve Insertion Tool ■ ▲

● SERVICE ITEMS
▲ Not illustrated
❑ See Pilot Valve Assembly Section.

■ SERVICE TOOLS
◆ Not serviced separately
❍ See Golf Sprinkler Body Assembly Section.

690 Series Golf Sprinkler

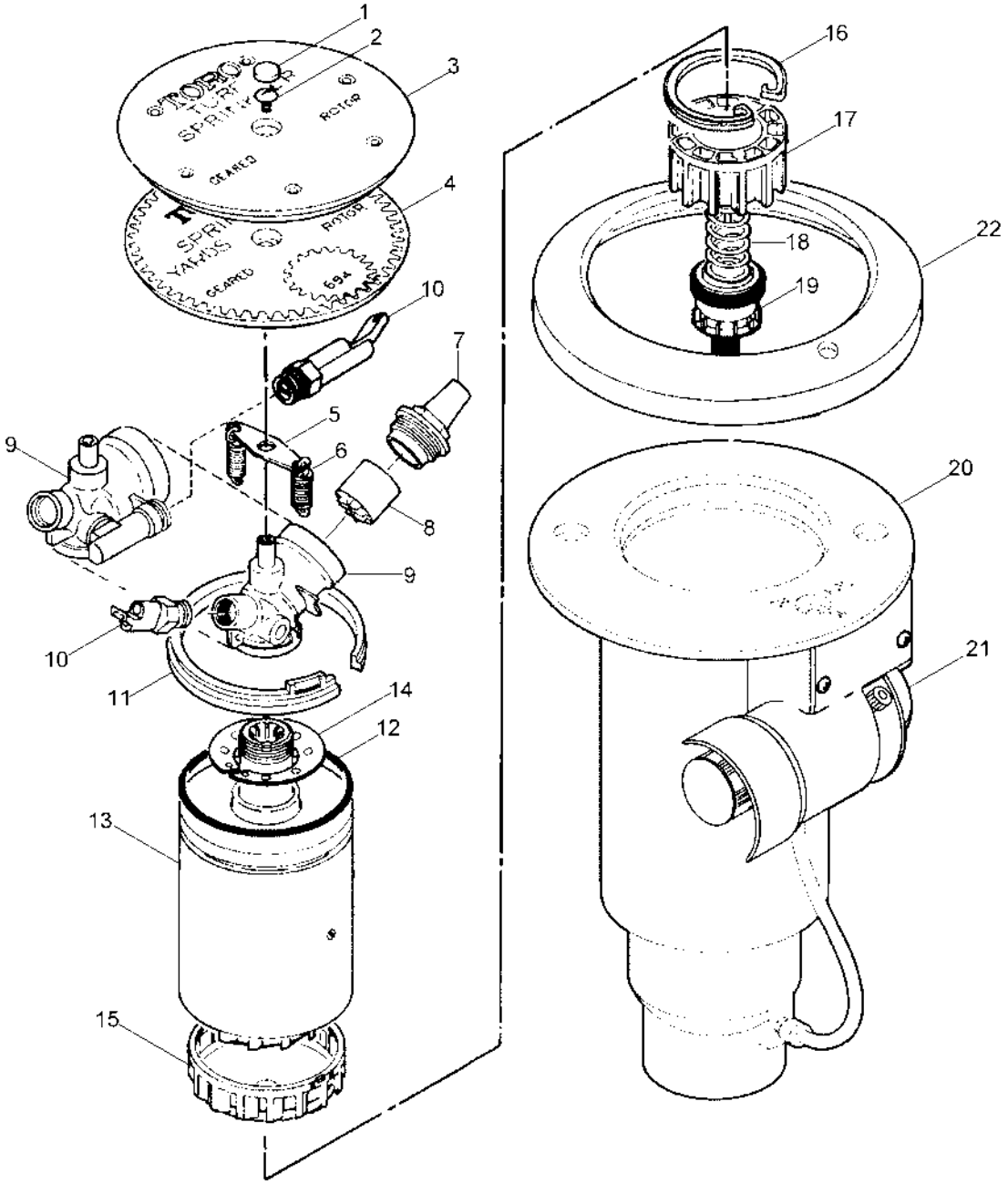

690 Series Golf Sprinkler (continued)

Ref.	Part Number	Qty.	Description
1	3-2518	1	Plug-Cap , Rubber
2	3-3567	1	Screw-Machine, 1/4-20 X 3/8
3	3-3582	1	Cover-Cap, Rubber
4	3-3532	1	Cap
5	9-2734	1	Strap-Spring
6	9-2738	2	Spring-Retraction
7	89-5816	1	Nozzle-Main, 3/8, No. 90
7	3-3542	1	Nozzle-Main, 7/16, No. 91
7	3-3543	1	Nozzle-Main, 1/2, No. 92
8	3-3535	1	Straightener-Stream
9	3-3531	1	Base-Nozzle, Full-Circle
9	9-1079	1	Base-Nozzle, Part-Circle
10	9-5535	1	Nozzle-Back
11	3-3536	1	Ring-Snap, Head
12	363-3210	1	O-Ring (0.139 X 4.359 X 4.637)
13	9-1849	1	Drive ASM, Quarter-Circle, 691 (Includes Item 14)
13	9-1850	1	Drive ASM, Half-Circle, 692 (Includes Item 14)
13	3-3585	1	Drive ASM, Full-Circle, 694 (Includes Item 14)
13	35-5123	1	Drive ASM, 696, 2-Speed, 60°-120° (Includes Item 14)
13	3-3549	1	Drive ASM, 698, 2-Speed 180° (Includes Item 14)
13	89-8145	1	Drive ASM, 150° (Includes Item 14)
13	89-8146	1	Drive ASM, 165° (Includes Item 14)
13	89-8147	1	Drive ASM, 195° (Includes Item 14)
13	89-8148	1	Drive ASM, 210° Includes Item 14)
14		1	Collar, Spring ◆
15	3-3586	1	Stator, 3/8, #90
15	3-3568	1	Stator, 7/16, #91
15	3-3555	1	Stator, 1/2, #92
16	3-3304	1	Snap Ring, Valve
17	9-1479	1	Cylinder ASM, No, Com And Drain Valve
17	102-0626	1	Cylinder Assy., El And No/Com
18	3-3311	1	Spring-Valve, Com, Black
18	102-6411	1	Spring, Valve, El/No, Silver
19	89-1201	1	Piston Assy, Valve, No And Com
19	102-6311	1	Piston Assy., Valve, El & Nc
20		1	Body Assembly (See Sprinkler Golf Body Assembly Section) ❍ ◆
21		1	Pilot Valve Assembly (See Pilot Valve Assembly Section) ❑ ◆
22	3-3581	1	Cover-Body, Rubber
	3-3529		Cap ASM, Rubber Cover ● ▲
	3-3579		Body-Electric W/O/Vih (Includes Items 20-21) ● ▲
	89-4861		Body-Electric W/Vih (Includes Items 16-21) ● ▲
	89-4873		Body-Electric W/Vih, 80 Psi. Pv (Includes Items 16-21) ● ▲
	89-1019		Body-Electric W/Vih, 100 Psi. Pv (Includes Items 16-21) ● ▲
	3-3558		Body-Hydraulic No W/O/Vih (Includes Items 20 And 21) ● ▲
	89-1038		Body-Hydraulic No W/Vih (Includes Items 16-21) ● ▲
	9-1497		Body-Com W/O/Vih (Includes Items 20 And 21) ● ▲
	89-4879		Body-Com W/Vih (Includes Items 16-21) ● ▲
	9-4079		Nozzle ASM, 690-90 (Includes Items 7-10) ● ▲
	9-4080		Nozzle ASM, 690-91 (Includes Items 7-10) ● ▲
	9-4081		Nozzle ASM, 690-92 (Includes Items 7-10) ● ▲
	9-4083		Nozzle ASM, 694-90 (Includes Items 7-10) ● ▲
	9-4084		Nozzle ASM, 694-91 (Includes Items 7-10) ● ▲
	9-4085		Nozzle ASM, 694-92 (Includes Items 7-10) ● ▲
	9-5747		Nozzle Base ASM, 690, Dual Back Nozzles (Front And Back) ● ▲
	9-2669		Retraction ASM, Spring (Includes Items 5, 6, 11 And 14) ● ▲
	690-01		Rubber Cover Kit (Includes Items 1, 3 And 22) ● ▲
	9-7271		Adapter-Tubing, Oversized Thread (Replaces Item 2) ● ▲
	995-06		Drive ASM Extraction Tool ■ ▲
	995-100		Valve Snap Ring Pliers With Screen Remover ■ ▲
	995-09		Valve Removal Tool ■ ▲
	995-12		Valve Insertion Tool ■ ▲
	995-15		Selector Tool (Flag Key) ■ ▲
	995-17		Pliers-Riser ■ ▲
	995-20		Valve Insertion Tool, Rubber Cover ■ ▲
	995-22		Adapter-Hose ■ ▲
	995-49		Gauge-Pressure ■ ◗ ▲

● SERVICE ITEMS
▲ Not illustrated
❑ See Pilot Valve Assembly Section.
◗ Order Through Finished Goods Distribution System - Minneapolis
■ SERVICE TOOLS
◆ Not serviced separately
❍ See Golf Sprinkler Body Assembly Section.

690 Series Golf Sprinkler (continued)

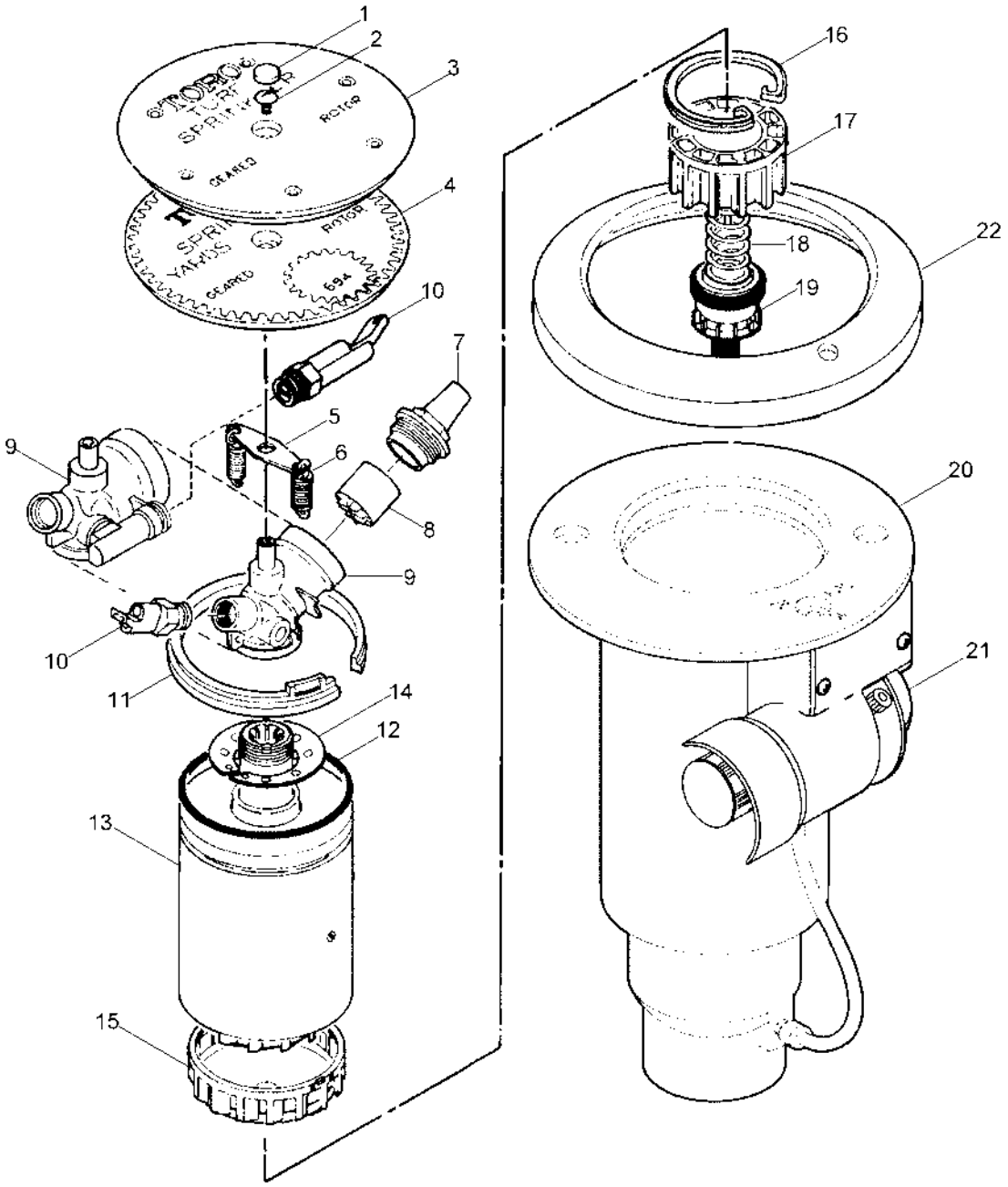

● SERVICE ITEMS
▲ Not illustrated
❑ See Pilot Valve Assembly Section.
◗ Order Through Finished Goods Distribution System - Minneapolis
■ SERVICE TOOLS
◆ Not serviced separately
❍ See Golf Sprinkler Body Assembly Section.

Golf Sprinkler Body - 1 Inch

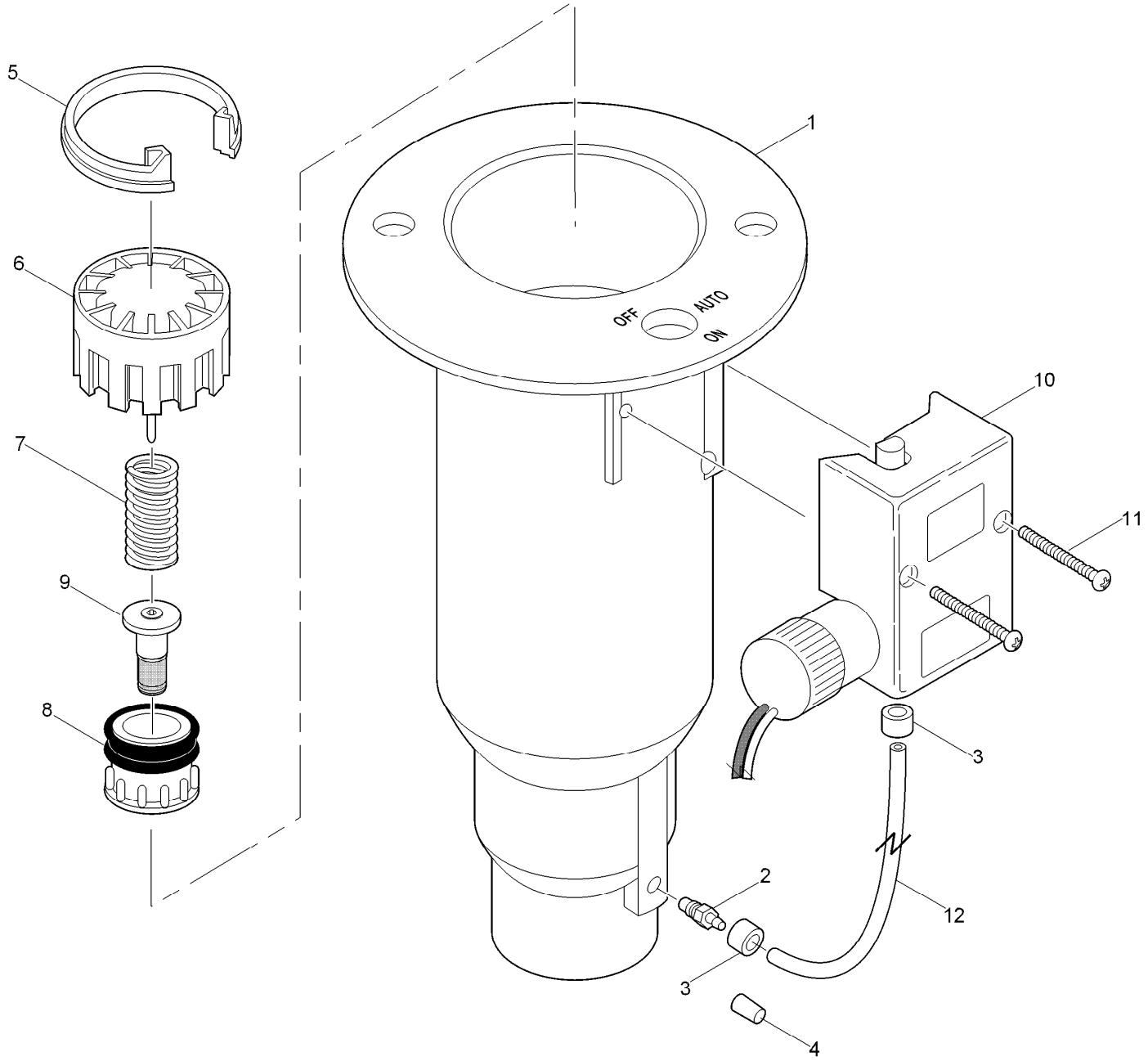

Golf Sprinkler Body - 1 Inch (continued)

Ref.	Part Number	Qty.	Description
1	35-9421		Electric W/O Vih, Npt (Includes Items 1-4) ▲
1	89-4128		Electric W/O Vih, Ribless, Npt (Includes Items 1-4) ▲ ❖
1	102-0083		Electric W/Vih, 720, Npt (Includes Items 1-9) ▲
1	35-9418		Hydraulic No W/O Vih, Npt (Includes Items 1-4) ▲
1	89-4126		Hydraulic No W/O Vih, Ribless, Npt (Includes Items 1-4) ▲ ❖
1	35-9453		Com W/O Vih, Npt (Includes Items 1-3 & 12) ▲
1	89-4127		Com W/O Vih, Ribless, Npt (Includes Items 1-3 & 12) ▲ ❖
1	35-9386		Electric W/O Vih, Bsp (Includes Items 1-4) ◆
1	102-0084		Electric W/Vih, 720, Bsp (Includes Items 1-9) ◆
1	35-9385		Hydraulic No W/O Vih, Bsp (Includes Items 1-4) ◆
1	89-8635		1" Acme Body Style, Electric W/O Vih (Includes Items 1-4) ❑
1	102-0085		1" Acme Body Style, Electric W/Vih, 720 (Includes Items 1-9) ❑
2	9-6002		Adapter-Tubing, Threaded, 1/4"
3	900-40		Retainer, Tube, Pr And Cr ✚
4	89-8157		Cap, 1/4", Poly, No
5	89-4702		Snap Ring, Valve
6	9-1485		Cylinder Assy., No & Com
6	9-1487		Cylinder Assy., El & Nc
7	3-2633		Spring, Valve, No, El & Nc
7	89-5821		Spring, Valve, Com
8	89-1044		Piston Assy., No & Com
8	89-1054		Piston Assy., El & Nc (Includes Item 9)
8	102-0081		Piston Assy., El (720 Only) (Includes Item 9)
9	35-9646		Filter Assy., Metering, El, Nc
10			Pilot Valve Assy. (See Pilot Valve Assembly Section) ◗ ❍
11	3-2696		Screw-Tap, #8
12	9-2622		Tubing, Poly, 1/4" X 6 1/4", El & Nc
12	9-1876		Tube, 1/4" X 12", Com
	89-1046		Valve Assy., 1.0" Hyd., No (Includes Items 6-8) ● ■
	89-1047		Valve Assy., Com (Includes Items 6-8) ● ■
	89-1048		Valve Assy., El, Nc (Includes Items 6-9) ● ■
	102-0082		Valve Assy., El, Low Flow (Includes Items 6-9) ● ■
	9-7271		Adapter-Tubing, Oversized Thread (Replaces Item 2) ● ■

● SERVICE ITEMS
▲ 1 Inch NPT Body Style
❑ 1 Inch ACME Body Style
◗ See Pilot Valve Assembly Section.
✚ Order Through Finished Goods Distribution System - Minneapolis
❖ Ribless bodies are used with sprinklers manufactured prior to July 1993.
■ Not illustrated
◆ 1 Inch BSP Body Style
❍ Not serviced separately

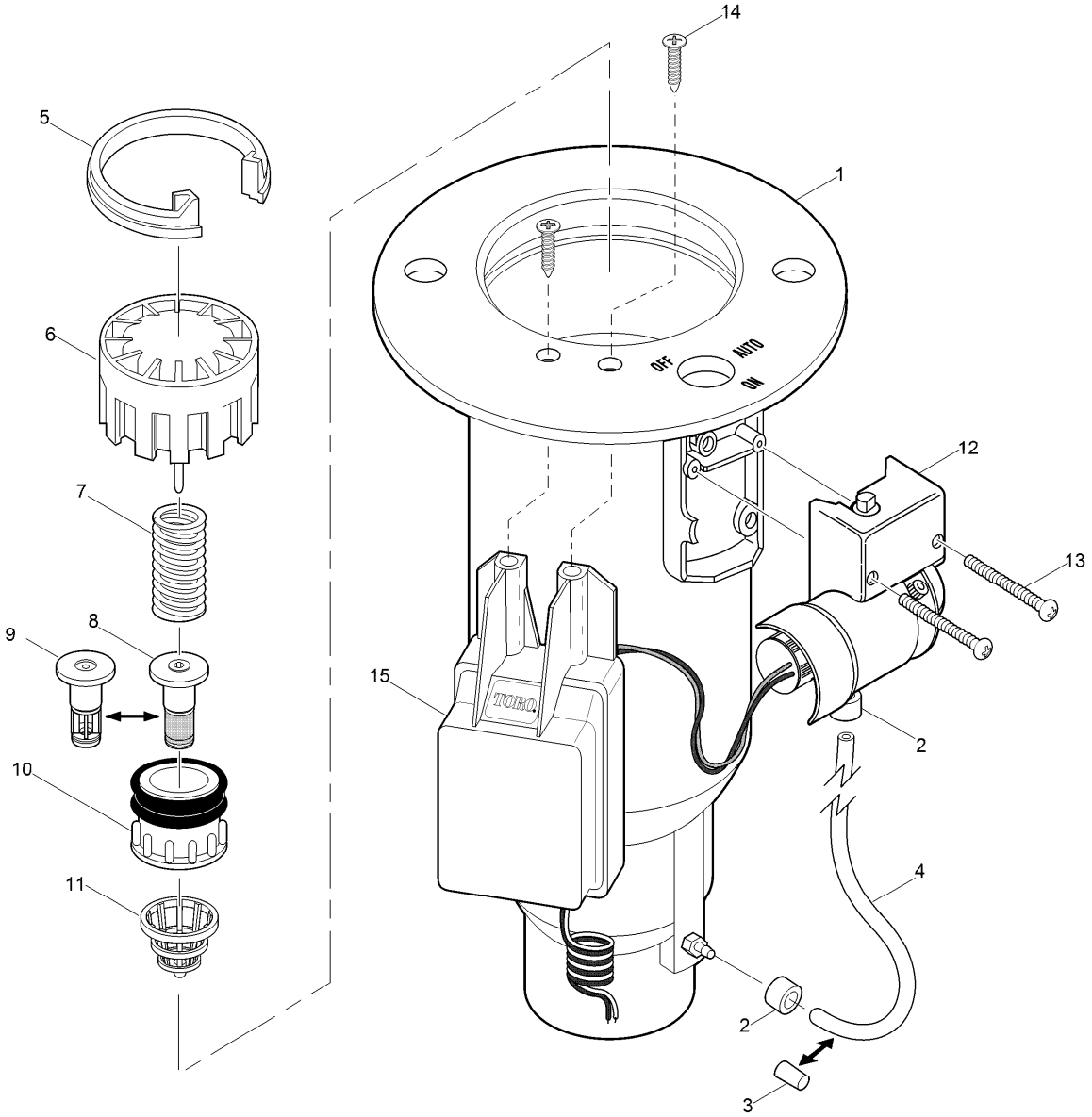

Golf Sprinkler Body - 1 Inch - 800S and DT Series

Ref.	Part Number	Qty.	Description
1	102-1090	1	Electric W/O Vih, Npt (Includes Items 1-2) ▲
1	102-1084	1	Hydraulic No W/O Vih, Npt (Includes Items 1-2) ▲
1	102-1078	1	Com W/O Vih, Npt (Includes Items 1-3 & 5) ▲
1	118-1137	1	Body Assy., 1" Npt (For Decoder Equipped Models) ▲
1	102-1092	1	Electric W/O Vih, Bsp (Includes Items 1-2) ◆
1	102-1086	1	Hydraulic No W/O Vih, Bsp (Includes Items 1-2) ◆
1	102-1080	1	Com W/O Vih, Bsp (Includes Items 1-3 & 5) ◆

Ref.	Part Number	Qty.	Description
1	118-1138	1	Body Assy., 1" Bsp (For Decoder Equipped Models) ◆
1	102-1094	1	1" Acme Body Style, Electric W/O Vih (Includes Items 1-2) ❑
1	102-1088	1	1" Acme Body Style, Hydraulic No W/O Vih (Includes Items 1-2) ❑
1	102-1082	1	1" Acme Body Style, Com W/O Vih (Includes Items 1-3 & 5) ❑
1	118-1139	1	Body Assy., 1" Acme (For Decoder Equipped Models) ❑

● SERVICE ITEMS
▲ 1 Inch NPT Body Style
❑ 1 Inch ACME Body Style
◗ See Pilot Valve Assembly Section.
✚ Order Through Finished Goods Distribution System - Minneapolis
■ Not illustrated
◆ 1 Inch BSP Body Style
❍ Not serviced separately

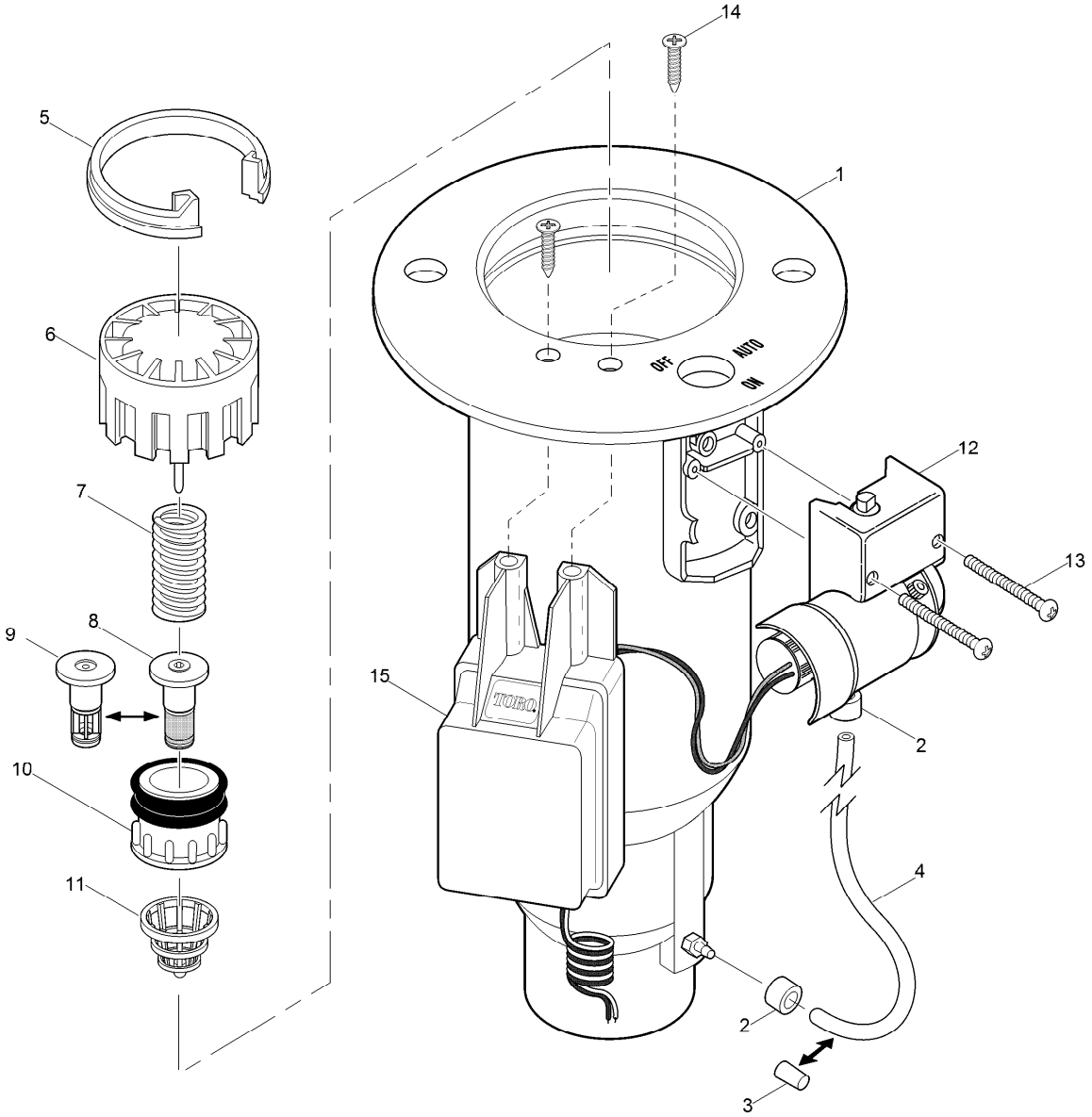

Golf Sprinkler Body - 1 Inch - 800S and DT Series (continued)

Ref.	Part Number	Qty.	Description
2	900-40	2	Retainer, Tube, Pr And Cr ✚
3	89-8157	1	Cap, 1/4
4	9-2623	1	Tube, 1/4
4	9-1876	1	Tube, 1/4
5	89-4702	1	Snap Ring, Valve
6	102-0623	1	Cylinder Assy., El & No/Com
7	3-2633	1	Spring, Valve, No, El & Nc
7	89-5821	1	Spring, Valve, Com
8	35-9646	1	Filter Assy., Metering, El, Nc
9	102-6529	1	Filter Assy., Non-Metering, No/Com
10	102-6314	1	Piston Assy., No & Com
10	89-1054	1	Piston Assy., El & Nc,

Ref.	Part Number	Qty.	Description
11	102-0784	1	Rock Screen, 1
12		1	Pilot Valve Assy. (See Pilot Valve Assembly Section) ❍◗
13	3-2696	2	Screw-Tap, #8
14	363-6396	2	Screw (For Decoder Equipped Models)
15	DEC-ISP-1GB	1	Gdc Module W/O Solenoid, 1-Station, Golf Body
15	118-0841	1	Gdc Module W/ Solenoid, 1-Station, Golf Body
	102-6313	1	Valve Assy., No ●■
	102-6312	1	Valve Assy., Com ●■
	102-0624	1	Valve Assy., El, Nc ●■

● SERVICE ITEMS
▲ 1 Inch NPT Body Style
❑ 1 Inch ACME Body Style
◗ See Pilot Valve Assembly Section.
✚ Order Through Finished Goods Distribution System - Minneapolis
■ Not illustrated
◆ 1 Inch BSP Body Style
❍ Not serviced separately

Golf Sprinkler Body - 1.5 Inch

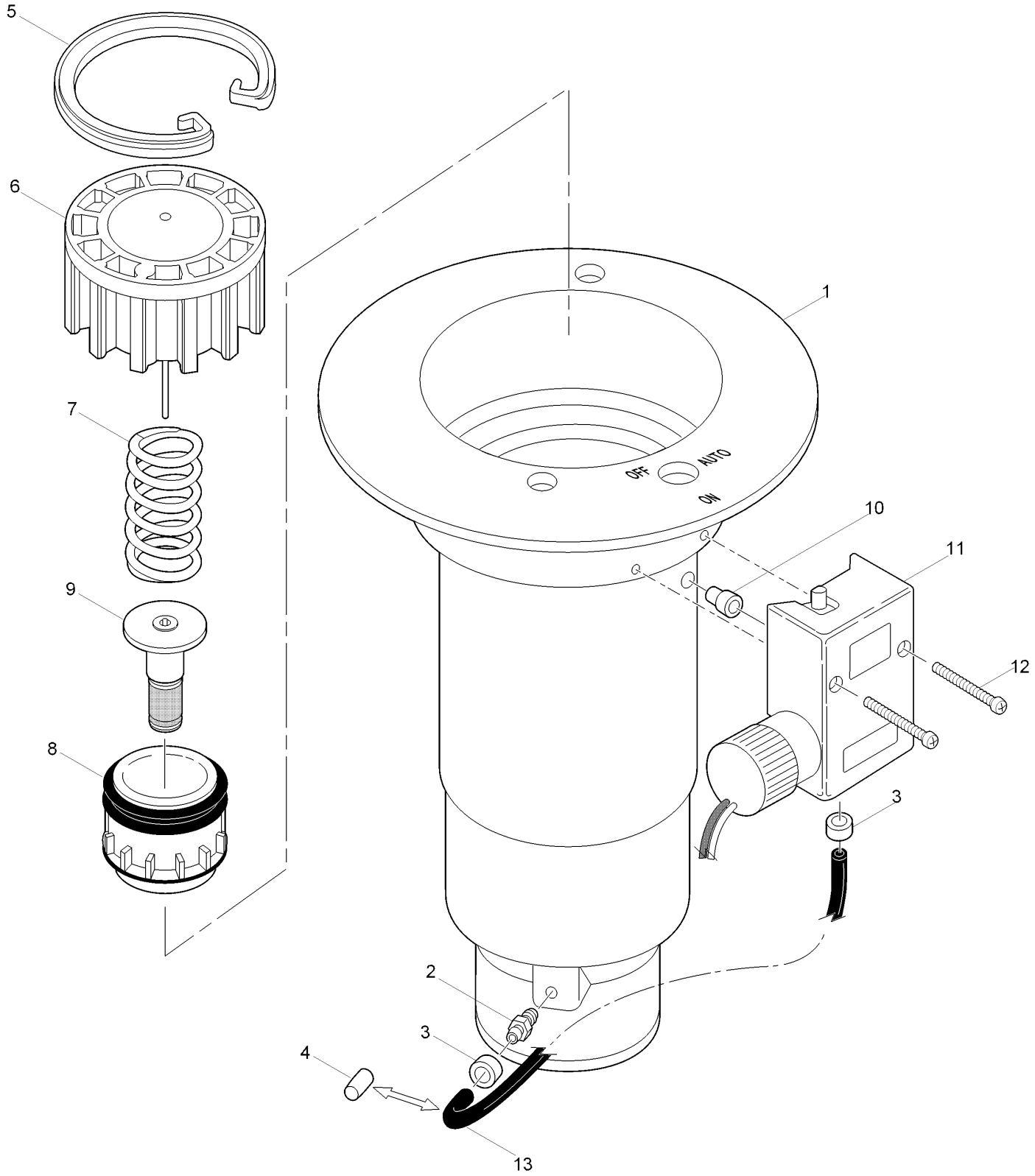

Golf Sprinkler Body - 1.5 Inch (continued)

Ref.	Part Number	Qty.	Description
1	3-3389	1	Electric W/O Vih, Npt (Includes Items 1-4) ◆
1	3-3343	1	Hydraulic No W/O Vih, Npt (Includes Items 1-4) ◆
1	9-1257	1	Com W/O Vih, Npt (Includes Items 1-3 And 13) ◆
1	35-5362	1	Electric W/O Vih, Bsp (Includes Items 1-4) ❑
1	35-5322	1	Com W/O Vih, Bsp (Includes Items 1-3 And 13) ❑
1	35-5245		Hydraulic No W/O Vih, Bsp (Includes Items 1-4) ❑
1	89-8646	1	Electric W/O Vih, Acme (Includes Items 1-4) ❍
1	89-8652	1	Com W/O Vih, Acme (Includes Items 1-3 And 13) ❍
1	89-8654	1	Hydraulic No W/O Vih, Acme (Includes Items 1-4) ❍
2	9-6002	1	Adapter-Tubing, Threaded, 1/4"
3	900-40		Retainer, Tube, Pr And Cr ✚
4	89-8157	1	Cap, 1/4", Poly, No
5	3-3304	1	Snap Ring, Valve
6	9-1479	1	Cylinder ASM, No, Com And Drain Valve
6	102-0626	1	Cylinder Assy., El And No/Com
7	102-6411	1	Spring, Valve, El/No, Silver
7	3-3311	1	Spring-Valve, Com, Black
8	89-1201	1	Piston Assy, Valve, No And Com
8	102-5101	1	Piston Assy., El (Includes Item 9)
9	35-9645	1	Filter Assy., Metering, El & Nc
10	35-7663	1	Adapter, Pilot Valve To Body
11		1	Pilot Valve Assy. (See Pilot Valve Assembly Section) ◗▲
12	3-2696	2	Screw-Tap, #8
13	9-2623	1	Tube, 1/4" X 8", El
13	9-1876	1	Tube, 1/4" X 12", Com
	89-1036		Valve Assy., No (Includes Items 6-8) ●■
	89-1037		Valve Assy., Com (Includes Items 6-8) ●■
	102-4003		Valve Assy., El (Includes Items 6-9) ●■
	9-7271		Adapter-Tubing, Oversized Thread (Replaces Item 2) ●■

● SERVICE ITEMS
▲ Not serviced separately
❑ 1.5 Inch BSP Body Style
◗ See Pilot Valve Assembly Section.
✚ Order Through Finished Goods Distribution System - Minneapolis
■ Not illustrated
◆ 1.5 Inch NPT Body Style
❍ 1.5 Inch ACME Body Style

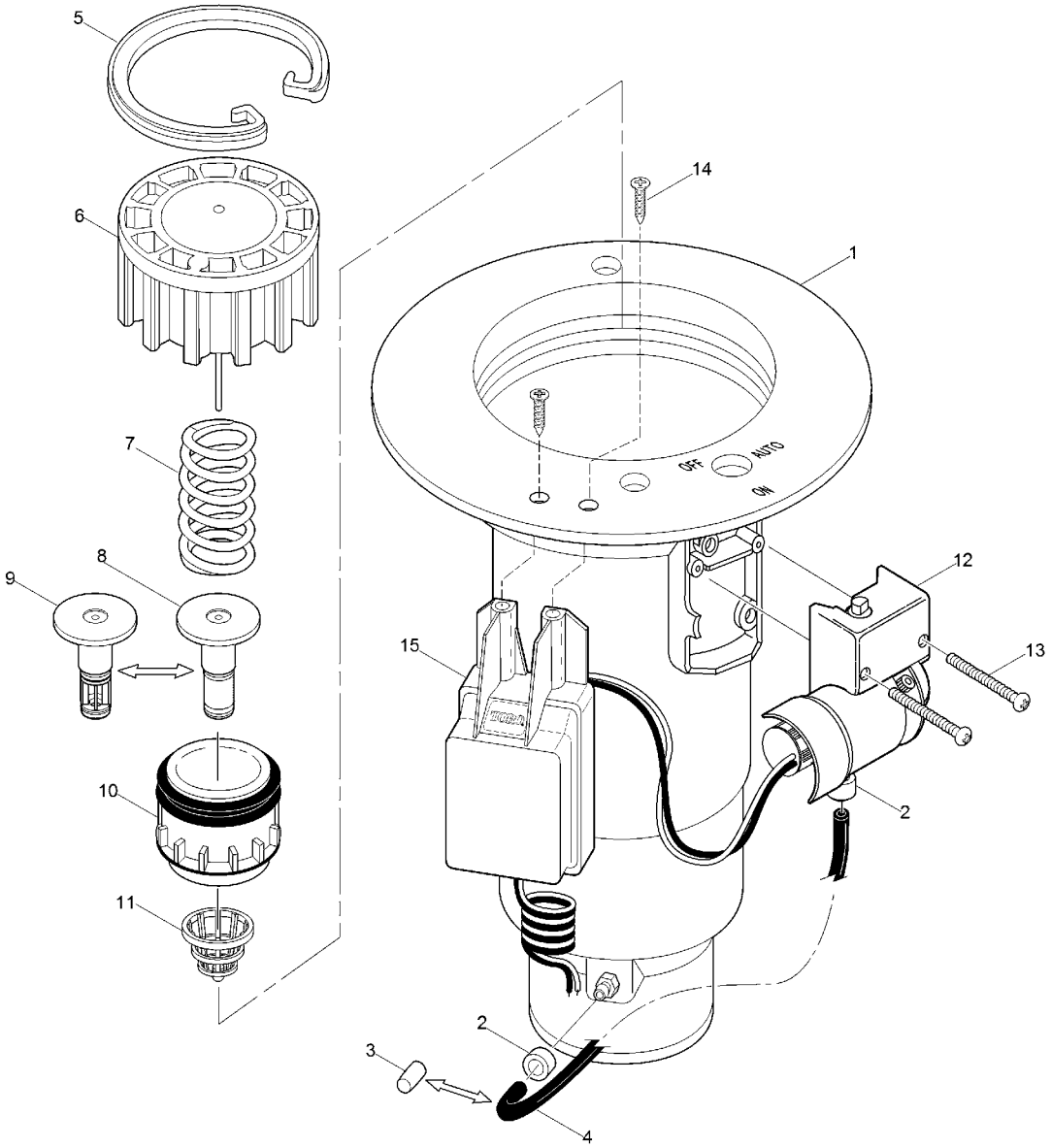

Golf Sprinkler Body - 1.5 Inch - 800S and DT Series

Ref.	Part Number	Qty.	Description
1	102-1149	1	Electric W/O Vih, Npt (Includes Items 1 And 2) ◆
1	102-1143	1	Hydaulic No W/O Vih, Npt (Includes Items 1 And 2) ◆
1	102-1137	1	Com W/O Vih, Npt (Includes Items 1-3 And 5) ◆
1	118-1134	1	Body Assy., 1.5" Npt (For Decoder Equipped Models) ◆
1	102-1151	1	Electric W/O Vih, Bsp (Includes Items 1 And 2) ❑
1	102-1139	1	Com W/O Vih, Bsp (Includes Items 1-3 And 5) ❑
1	102-1145	1	Hydraulic No W/O Vih, Bsp (Includes Items 1 And 2) ❑

Ref.	Part Number	Qty.	Description
1	118-1135	1	Body Assy., 1.5" Bsp (For Decoder Equipped Models) ❑
1	102-1153	1	Electric W/O Vih, Acme (Includes Items 1 And 2) ❍
1	102-1141		Com W/O Vih, Acme (Includes 1-3 And 5) ❍
1	102-1147	1	Hydraulic No W/O Vih, Acme (Includes Items 1 And 2) ❍
1	118-1136	1	Body Assy., 1.5" Acme (For Decoder Equipped Models) ❍
2	900-40	2	Retainer, Tube, Pr And Cr ✚
3	89-8157	1	Cap, 1/4

● SERVICE ITEMS
▲ Not serviced separately
❑ 1.5 Inch BSP Body Style
◗ See Pilot Valve Assembly Section.
✚ Order Through Finished Goods Distribution System - Minneapolis
■ Not illustrated
◆ 1.5 Inch NPT Body Style
❍ 1.5 Inch ACME Body Style

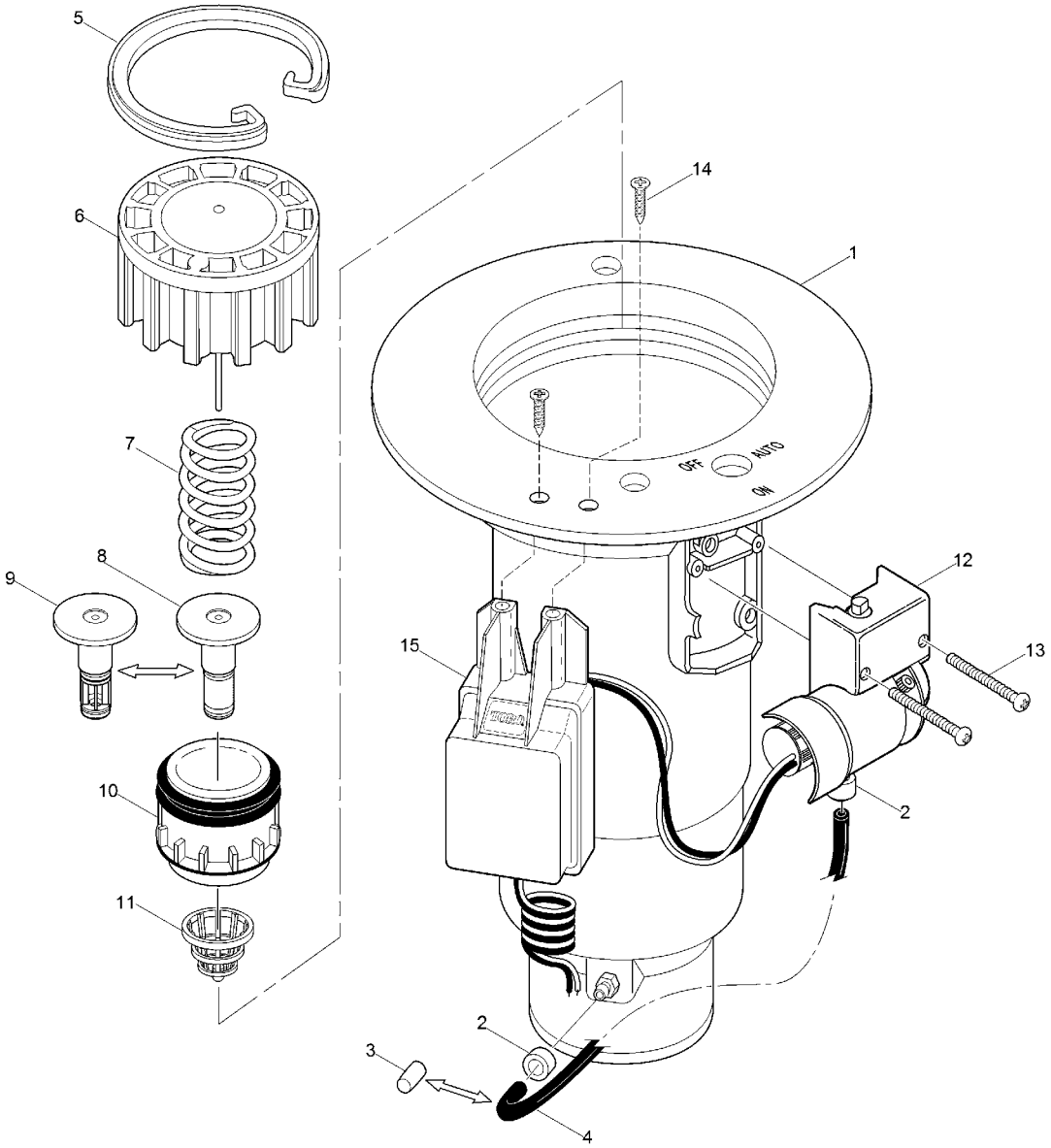

Golf Sprinkler Body - 1.5 Inch - 800S and DT Series (continued)

Ref.	Part Number	Qty.	Description
4	9-2623	1	Tube, 1/4
4	9-2624	1	Tubing, Poly, 1/4
5	3-3304	1	Snap Ring, Valve
6	102-0626	1	Cylinder Assy., El And No/Com
7	102-6411	1	Spring, Valve, El/No, Silver
7	3-3311	1	Spring-Valve, Com, Black
8	35-9645	1	Filter Assy., Metering, El & Nc
9	102-6530	1	Filter Assy., Non-Metering, No/Com
10	102-6311	1	Piston Assy., Valve, El & Nc

Ref.	Part Number	Qty.	Description
10	102-5101	1	Piston Assy., El
11	102-6065	1	Rock Screen, 1.5
12		1	Pilot Valve Assy., (See Pilot Valve Assembly Section.) ◗▲
13	3-2696	2	Screw-Tap, #8
14	363-6396	2	Screw (For Decoder Equipped Models)
15	118-0841	1	Gdc Module W/ Solenoid
15	DEC-ISP-1GB	1	Gdc Module W/O Solenoid
	102-6309	1	Valve Assy., Com ●■
	102-6310	1	Valve Assy., No ●■
	102-4003	1	Valve Assy., El ●■

● SERVICE ITEMS
▲ Not serviced separately
❑ 1.5 Inch BSP Body Style
◗ See Pilot Valve Assembly Section.
✚ Order Through Finished Goods Distribution System - Minneapolis
■ Not illustrated
◆ 1.5 Inch NPT Body Style
❍ 1.5 Inch ACME Body Style

Pilot Valve

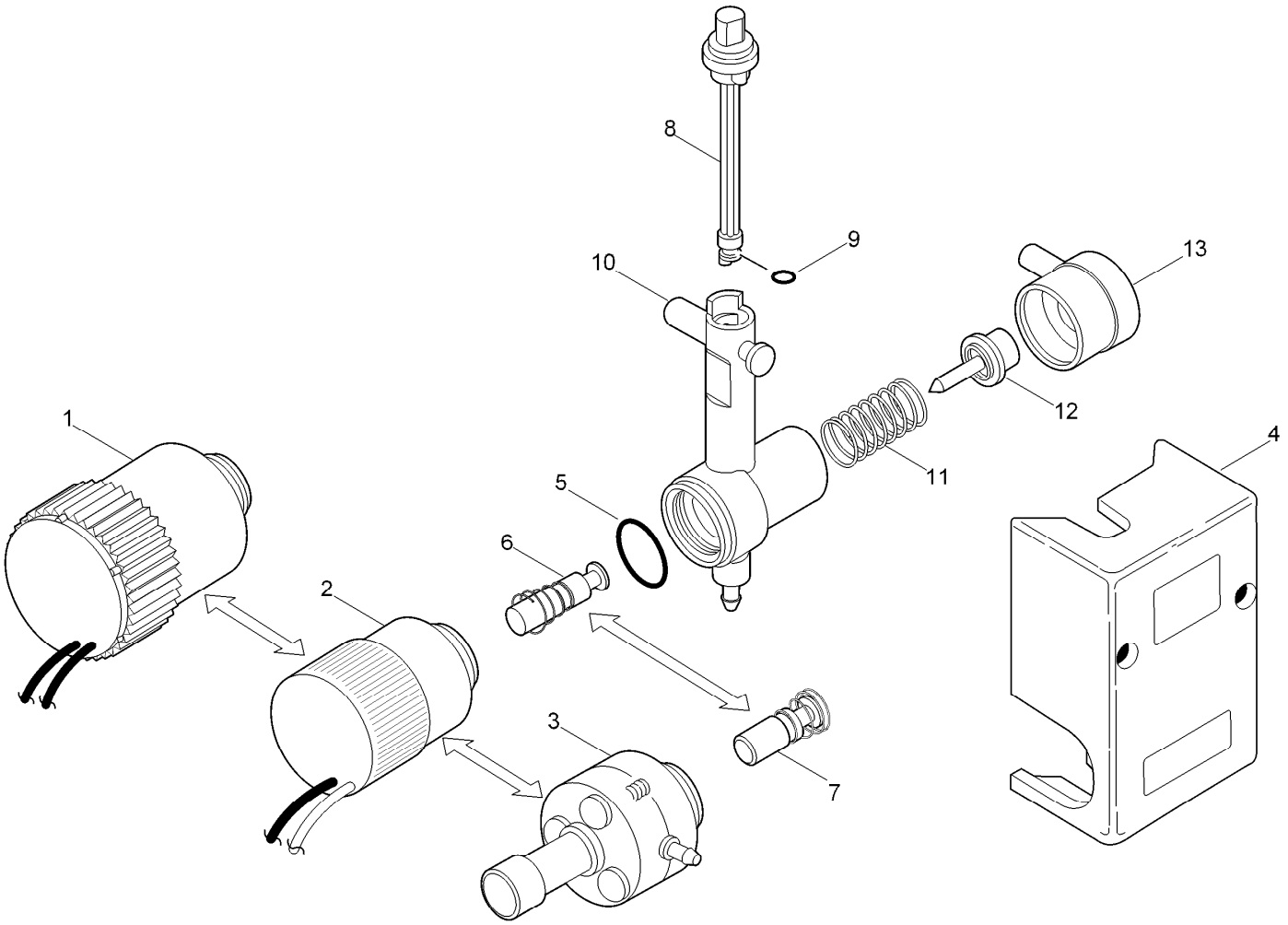

Pilot Valve (continued)

Ref.	Part Number	Qty.	Description
1	102-3443	1	Solenoid-Low Wattage, W/Surge Protection (Black Wires)
1	102-3444	1	Solenoid-Low Wattage, W/Surge Protection, Nickel Plated (Red Wires)
1	102-2709	1	Solenoid Assy., 24Vdc, Latching
2	118-0248	1	Solenoid, 600/700 Series (Red & Black Wires)
3	89-6005	1	Adapter-Pilot Valve, Nc
4	89-0001	1	Housing-Pilot Valve
5	360-0220	1	O-Ring (0.070 X 0.551 X 0.691) (As568-015)
6	102-7690	1	Plunger Assy., El
7	89-6003	1	Plunger ASM, Nc
8	102-0343	1	Selector Cam, Black (Includes Item 9)
9	1-2035	1	O-Ring, El, Pr And Cr (0.070" X 0.114" X 0.254") (As568-006)
10	102-7723	1	Body Assy., Pilot Valve (Cross-Reference W/ New Pilot Valve Assy., W/O Solenoid)
11	35-9970	1	Spring, 50 Psi, Black
11	35-9971	1	Spring, 65 Psi, Green
11	35-9972	1	Spring, 80 Psi, Red
11	35-9973	1	Spring, 100 Psi, Blue
12	89-0029	1	Piston
13	89-0005		Diaphragm ASM

Pilot Valve, Adjustable Pressure

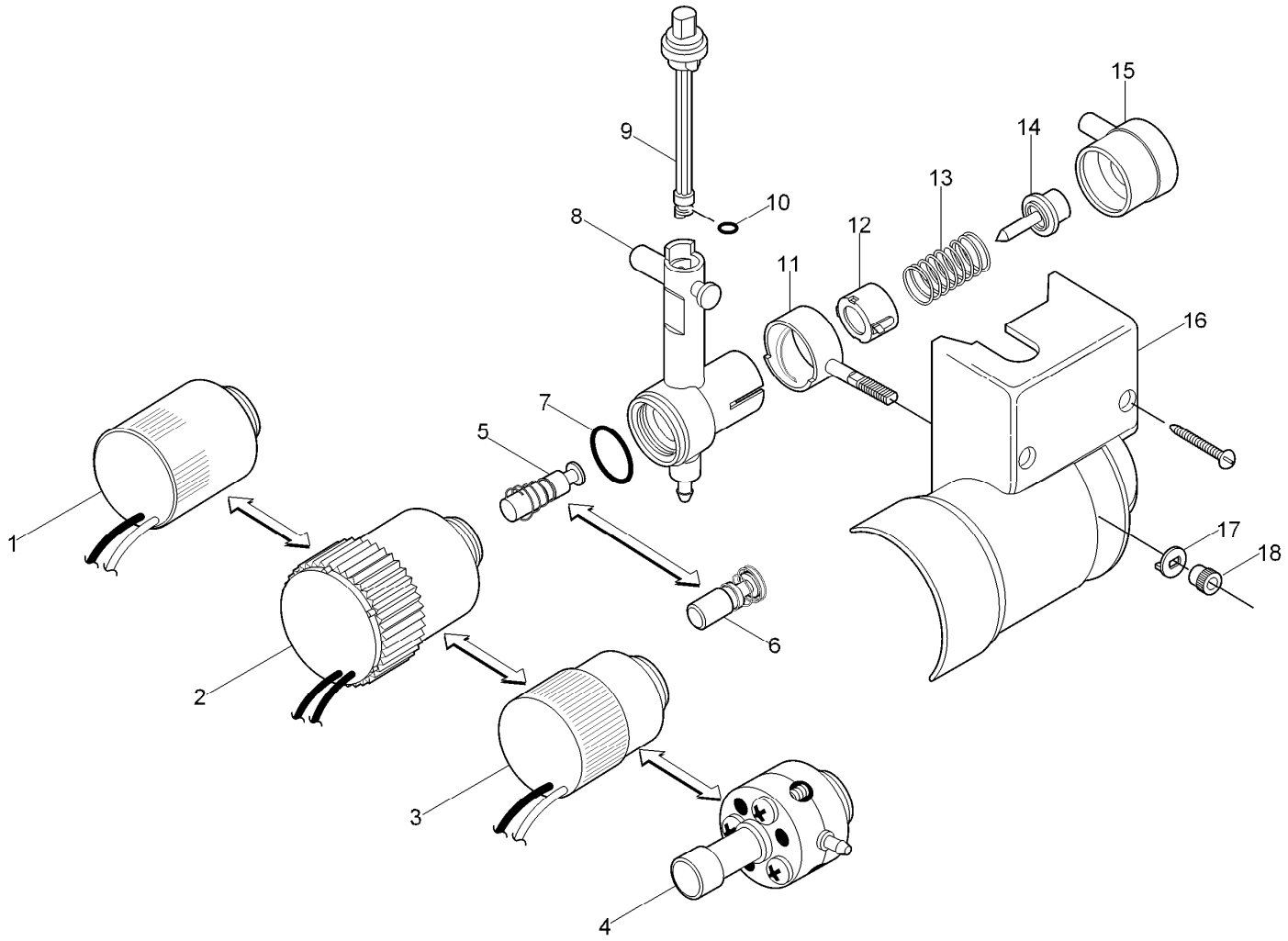

Pilot Valve, Adjustable Pressure (continued)

Ref.	Part Number	Qty.	Description
1	102-2709	1	Solenoid Assy., 24Vdc, Latching
2	102-3443	1	Solenoid-Low Wattage, W/Surge Protection (Black Wires)
2	102-3444	1	Solenoid-Low Wattage, W/Surge Protection, Nickel Plated (Red Wires)
2	102-4979	1	Solenoid-Low Wattage, 2-Wire Decoder, W/Surge Protection (Yellow Wires)
3	118-0248	1	Solenoid, 600/700 Series (Red & Black Wires)
4	89-6005	1	Adapter-Pilot Valve, Nc
5	102-7690	1	Plunger Assy., El
6	89-6003	1	Plunger ASM, Nc
7	360-0220	1	O-Ring (0.070 X 0.551 X 0.691) (As568-015)
8	102-4747	1	Body Assy., Pilot Valve
9	102-0343	1	Selector Cam, Black (Includes Item 10)
9	102-4831		Selector Cam, Red (Includes Item 10)
10	1-2035	1	O-Ring, El, Pr And Cr (0.070" X 0.114" X 0.254") (As568-006)
11	102-2237	1	Adjuster, Psi
12	102-2236	1	Traveling Nut
13	102-2235	1	Spring
14	102-2469	1	Piston
15	102-2473	1	Diaphragm Assy.
16	118-0669	1	Housing, Pilot Valve
17	102-2606	1	Adjustment Locator
18	363-4441	1	Nut, Adjuster
	102-5975		Pilot Valve Assy., Selectable Pressure Less Solenoid,Use W/All Electric Pilot Valve Except Nickel Plated (Includes Items 5 [102-7690] & 7-18) ●■
	102-5974		Pilot Valve Assy., Selectable Pressure W/Low Watt/High Surge Solenoid 800S Series (Includes Items 2 [102-3443], 5 [102-7690] & 7-18) ●■
	102-5178		Pilot Valve Assy., Selectable Pressure W/Standard Watt & Surge Solenoid,600/700 Series (Includes Items 3, 5 [102-7690] & 7-18) ●■
	102-5181		Pilot Valve Assy., Selectable Pressure W/Normally Closed Actuator (Includes Items 4 & 6-18) ●■
	102-5976		Pilot Valve Assy., Selectable Pressure W/Low Watt/High Surge Nickel Plated (Includes Items 2 [102-3444], 5 [102-7690] & 7-18) ●■
	102-5977		Pilot Valve Assy., Selectable Pressure W/Standard Watt/High Surge, 3-Wire Decoder (Includes Items 2 [102-4979], 5 [102-7690] & 7-18) ●■
	102-6533		Pilot Valve Assy., Selectable Pressure W/Dc Latching Solenoid, 2-Wire Decoder (Includes Items 1, 5 [102-7690] & 7-18) ●■

● SERVICE ITEMS

■ Not illustrated

TPV Series Valve, 1 Inch Female

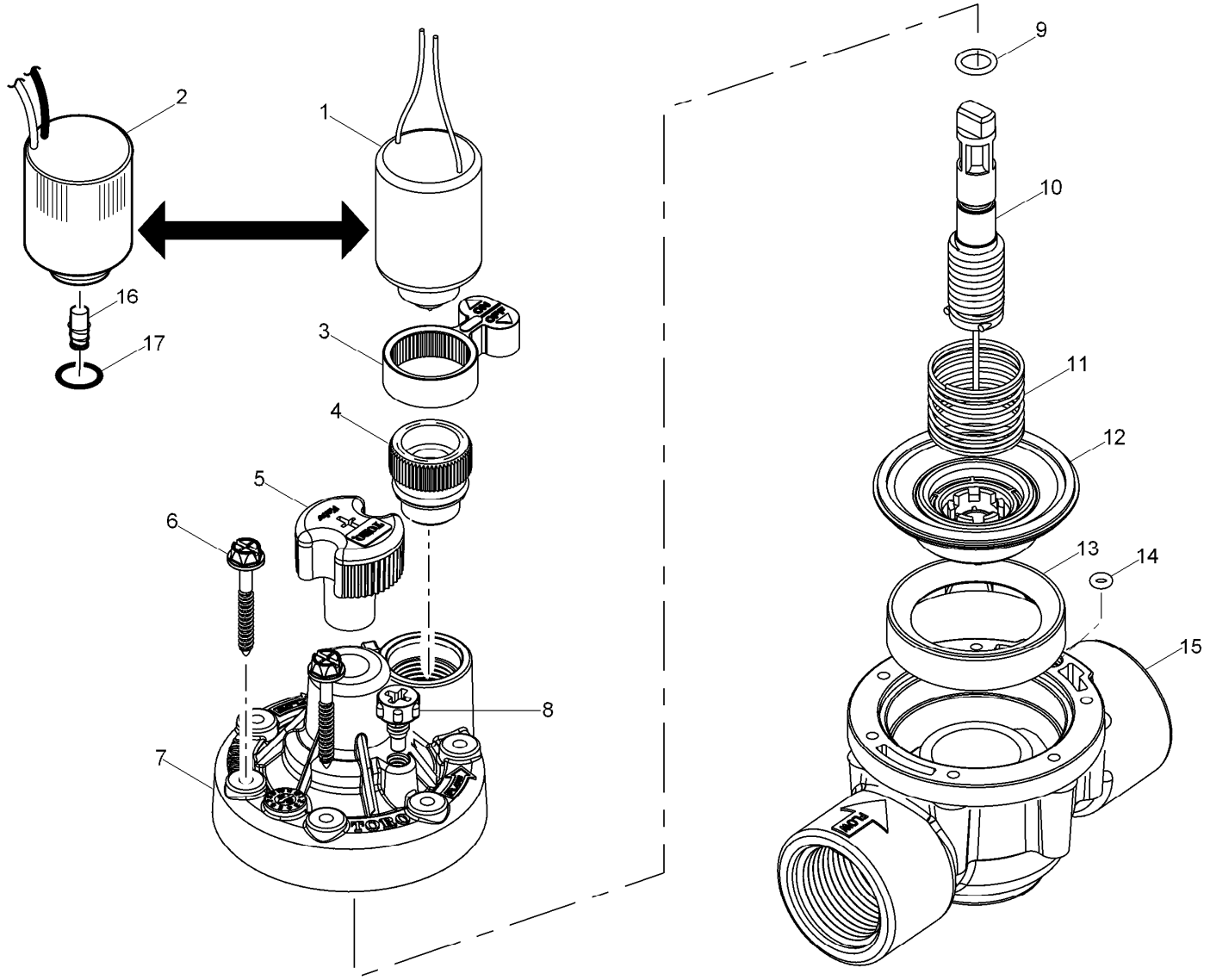

TPV Series Valve, 1 Inch Female (continued)

Ref.	Part Number	Qty.	Description
1	118-5982	1	Solenoid Assy. With Plunger, 24 Vac, 60 Hz
1	102-7054	1	Solenoid Assy. With Plunger, 24 Vac, 50 Hz
2	102-2709	1	Solenoid Assy., 24Vdc, Latching
3	606902	1	Handle, Bleed Plug
4	102-5593	1	Bleed Plug Assy.
5	102-6622	1	Handle, Flow Control (For Flow Control Models)
6	102-6644	6	Screw
7	102-6621	1	Cover Assy. (W/O Flow Control)
7	102-6620	1	Cover Assy. (For Flow Control Models)
8	1081401	1	External Bleed Screw
9	363-4246	1	O-Ring, Stem Assembly (For Flow Control Models)
10	1074701	1	Stem Assembly (For Flow Control Models)
11	153201	1	Spring
12	152201	1	Diaphragm Assy.
13	1116602	1	Divider (P/N 1116602 Divider [brown] Will Be Changed To P/N 1116601 [black])
14	531501	1	O-Ring, Body (As568-006)
15	102-6615	1	Body Assy., 1", F X F, Npt
15	102-6654	1	Body Assy., 1", F X F, Bsp
15	102-6655	1	Body Assy., 1", S X S
16	89-9562	1	Plunger Assy.
17	360-0220	1	O-Ring (0.070 X 0.551 X 0.691) (As568-015)
	EFF-Kit-60Hz	1	Reclaimed Water Solenoid Kit, Effluent, 60Hz, Domestic ●■
	EFF-Kit-50Hz	1	Reclaimed Water Solenoid Kit, Effluent, 50Hz, International ●■

● SERVICE ITEMS

■ Not illustrated

TPV Series Valve, 1 Inch Male

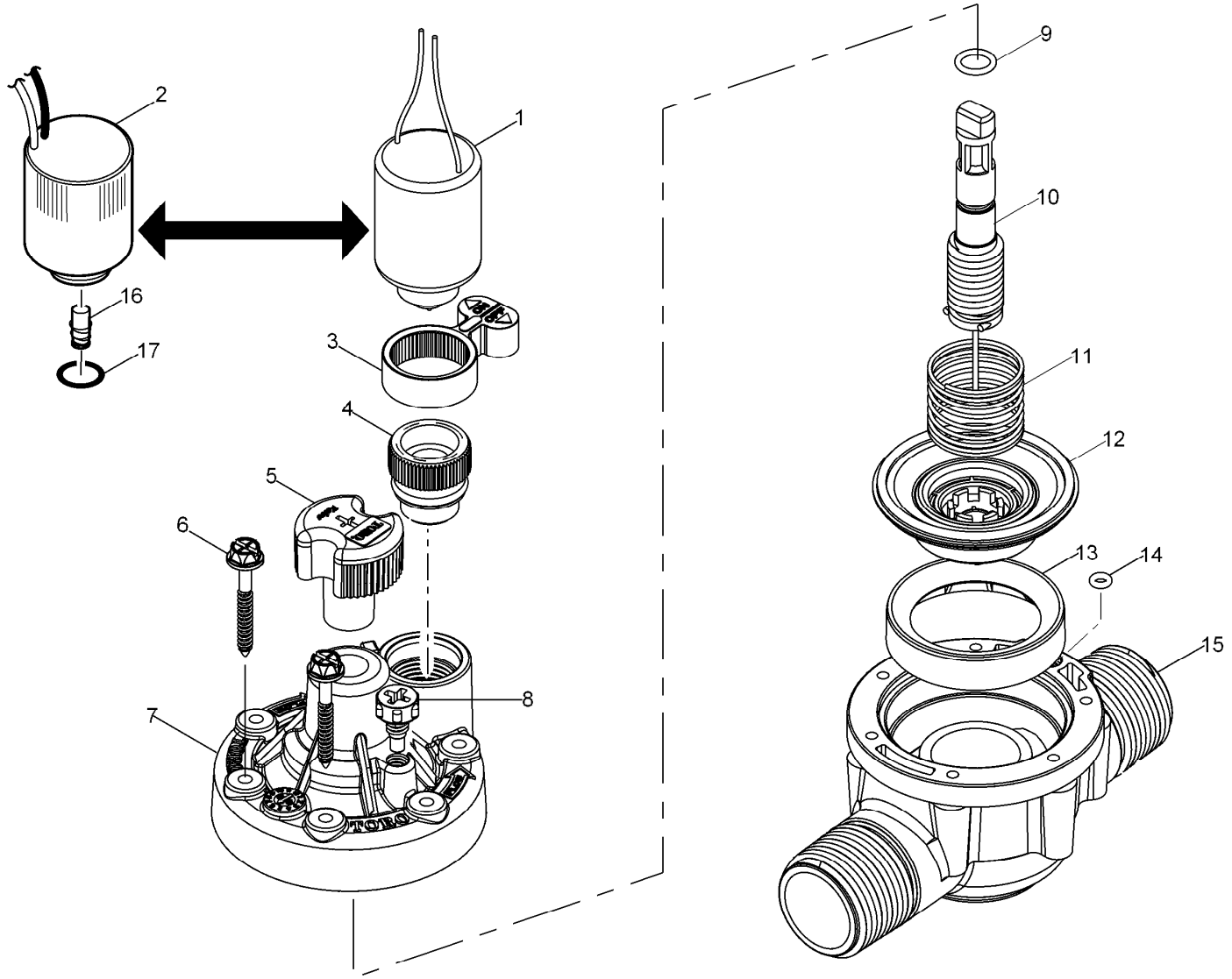

TPV Series Valve, 1 Inch Male (continued)

Ref.	Part Number	Qty.	Description
1	118-5982	1	Solenoid Assy. With Plunger, 24 Vac, 60 Hz
1	102-7054	1	Solenoid Assy. With Plunger, 24 Vac, 50 Hz
2	102-2709	1	Solenoid Assy., 24Vdc, Latching
3	606902	1	Handle, Bleed Plug
4	102-5593	1	Bleed Plug Assy.
5	102-6622	1	Handle, Flow Control (For Flow Control Models)
6	102-6644	6	Screw
7	102-6621	1	Cover Assy. (W/O Flow Control)
7	102-6620	1	Cover Assy. (For Flow Control Models)
8	1081401	1	External Bleed Screw
9	363-4246	1	O-Ring, Stem Assembly (For Flow Control Models)
10	1074701	1	Stem Assembly (For Flow Control Models)
11	153201	1	Spring
12	152201	1	Diaphragm Assy.
13	1116602	1	Divider (P/N 1116602 Divider [brown] Will Be Changed To P/N 1116601 [black])
14	531501	1	O-Ring, Body (As568-006)
15	102-6616	1	Body Assy., 1", M X M, Npt
15	102-6653	1	Body Assy., 1", M X M, Bsp
15	102-6617	1	Body Assy., 1", M X B, Npt
16	89-9562	1	Plunger Assy.
17	360-0220	1	O-Ring (0.070 X 0.551 X 0.691) (As568-015)
	EFF-Kit-50Hz	1	Reclaimed Water Solenoid Kit, Effluent, 50Hz, International ●■
	EFF-Kit-60Hz	1	Reclaimed Water Solenoid Kit, Effluent, 60Hz, Domestic ●■

● SERVICE ITEMS

■ Not illustrated

EZ-Flo Plus Series, 1 Inch Male

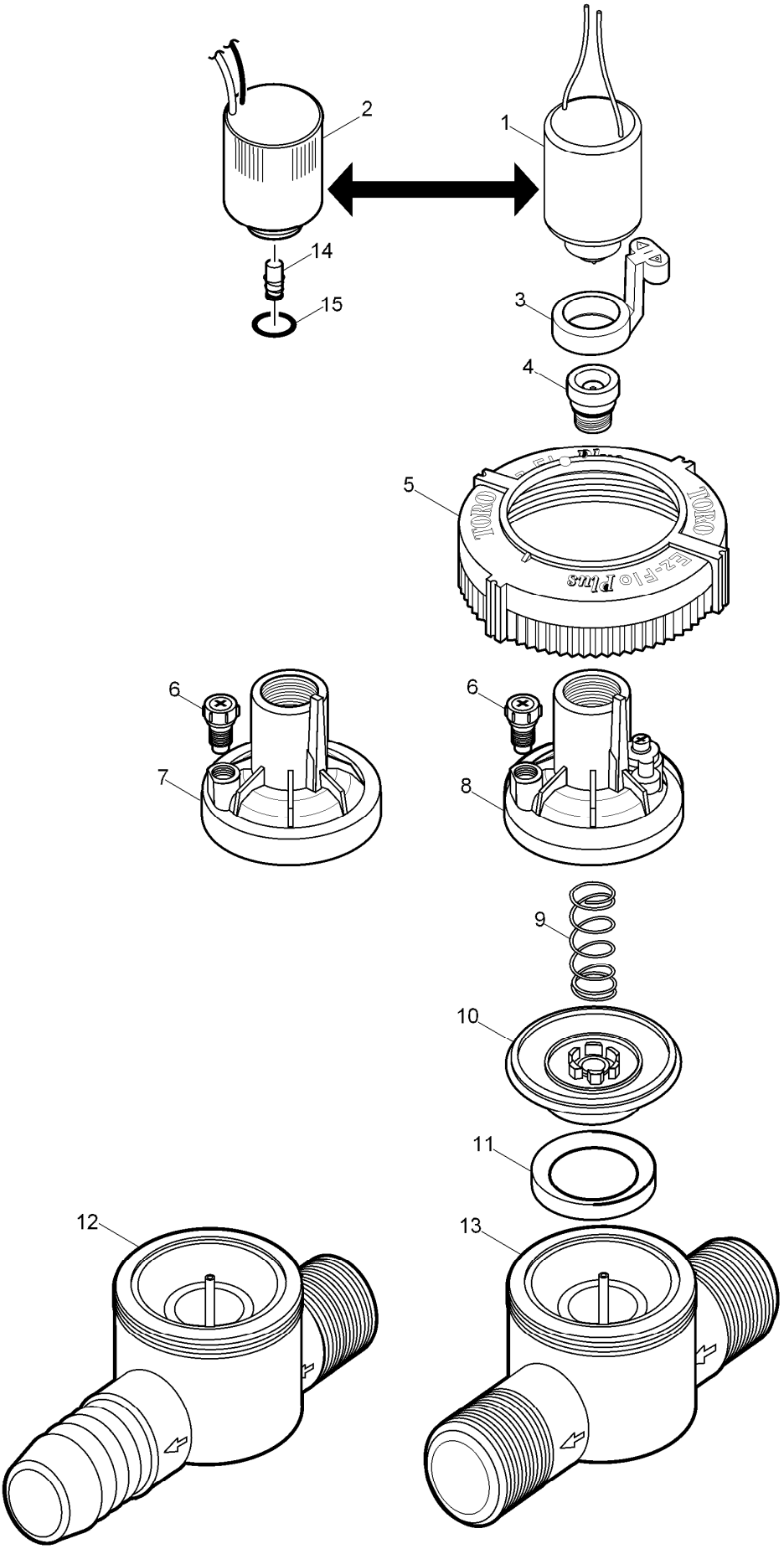

EZ-Flo Plus Series, 1 Inch Male (continued)

Ref.	Part Number	Qty.	Description
1	118-5982	1	Solenoid Assy. With Plunger, 24 Vac, 60 Hz
1	102-7054	1	Solenoid Assy. With Plunger, 24 Vac, 50 Hz
2	102-2709	1	Solenoid Assy., 24Vdc, Latching
3	1081501	1	Handle, Bleed Plug
4	102-5593	1	Bleed Plug Assy.
5	102-1717	1	Cover Nut
6	1081401	1	External Bleed Screw
7	512203	1	Cover Assy. (W/O Flow Control)
8	1115004	1	Cover Assy. (For Flow Control Models)
9	204A-37	1	Spring
10	138802	1	Diaphragm Assy.
11	1116602	1	Divider (P/N 1116602 Divider [brown] Will Be Changed To P/N 1116601 [black])
12		1	Body Assy., 1", M X B, Npt ●
13		1	Body Assy., 1", M X M, Npt ●
14	89-9562	1	Plunger Assy.
15	360-0220	1	O-Ring (0.070 X 0.551 X 0.691) (As568-015)

● Not serviced separately

EZ-Flo Plus Series, 1 Inch Female

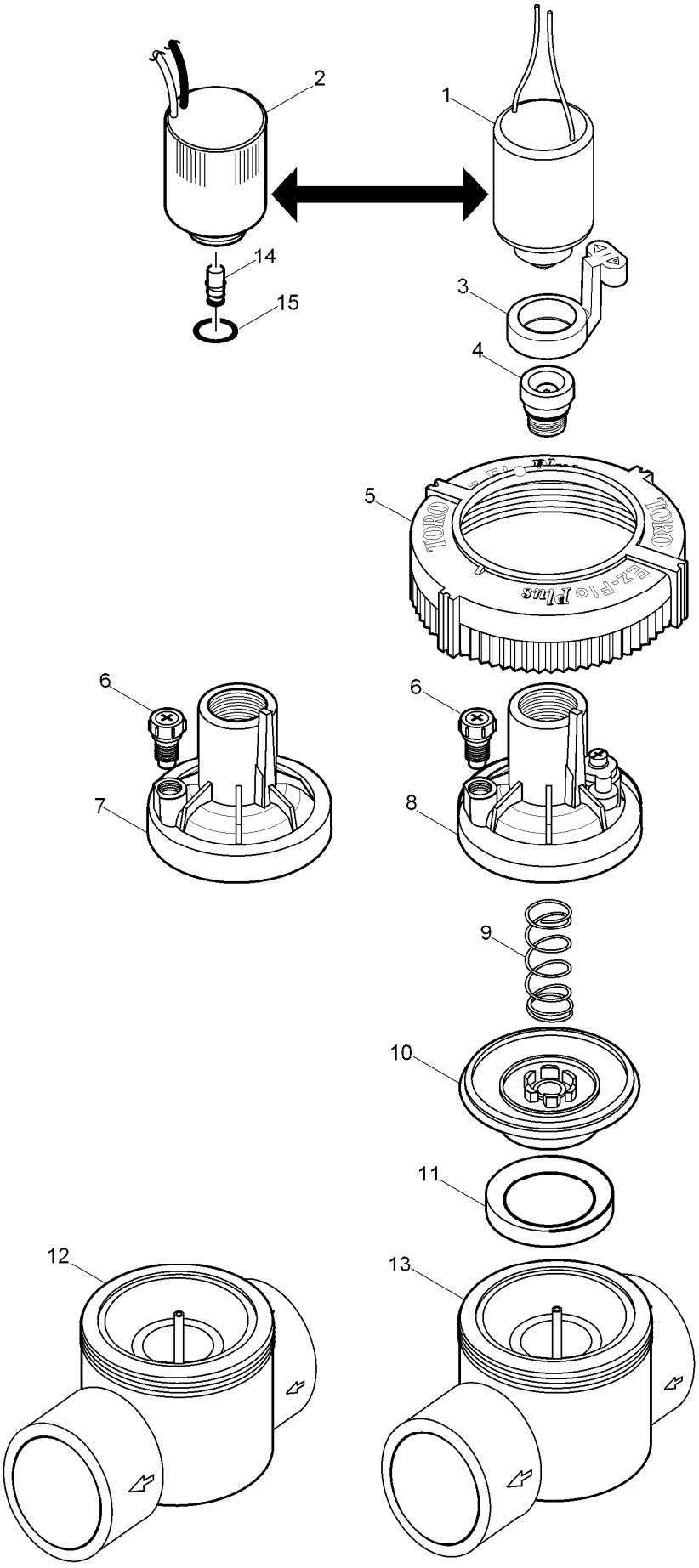

EZ-Flo Plus Series, 1 Inch Female (continued)

Ref.	Part Number	Qty.	Description
1	118-5982	1	Solenoid Assy. With Plunger, 24 Vac, 60 Hz
1	102-7054	1	Solenoid Assy. With Plunger, 24 Vac, 50 Hz
2	102-2709	1	Solenoid Assy., 24Vdc, Latching
3	1081501	1	Handle, Bleed Plug
4	102-5593	1	Bleed Plug Assy.
5	102-1717	1	Cover Nut
6	1081401	1	External Bleed Screw
7	512203	1	Cover Assy. (W/O Flow Control)
8	1115004	1	Cover Assy. (For Flow Control Models)
9	204A-37	1	Spring
10	138802	1	Diaphragm Assy.
11	1116601	1	Divider
12		1	Body Assy., 1", F X F, Slip ●
13		1	Body Assy., 1", F X F, Npt ●
14	89-9562	1	Plunger Assy.
15	360-0220	1	O-Ring (0.070 X 0.551 X 0.691) (As568-015)

● Not serviced separately

EZ-Flo Plus Series, 1 Inch Angle

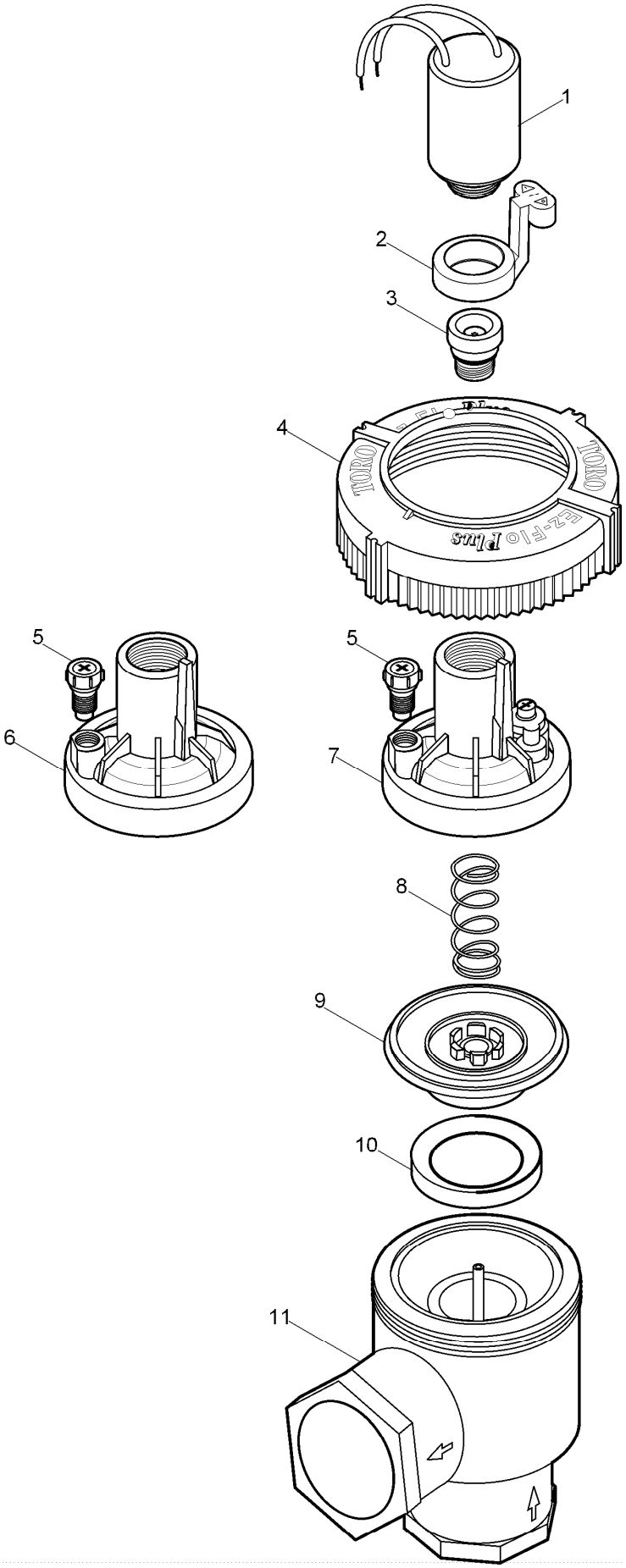

EZ-Flo Plus Series, 1 Inch Angle (continued)

Ref.	Part Number	Qty.	Description
1	118-5982	1	Solenoid Assy. With Plunger, 24 Vac, 60 Hz
1	102-7054	1	Solenoid Assy. With Plunger, 24 Vac, 50 Hz
2	1081501	1	Handle, Bleed Plug
3	102-5593	1	Bleed Plug Assy.
4	102-1717	1	Cover Nut
5	1081401	1	External Bleed Screw
6	512203	1	Cover Assy. (W/O Flow Control)
7	1115004	1	Cover Assy. (For Flow Control Models)
8	204A-37	1	Spring
9	138802	1	Diaphragm Assy.
10	1116601	1	Divider
11		1	Body Assy., 1", F X F, Npt ●

● Not serviced separately

EZ-Flo Plus AVB Series, 3/4 Inch and 1 Inch

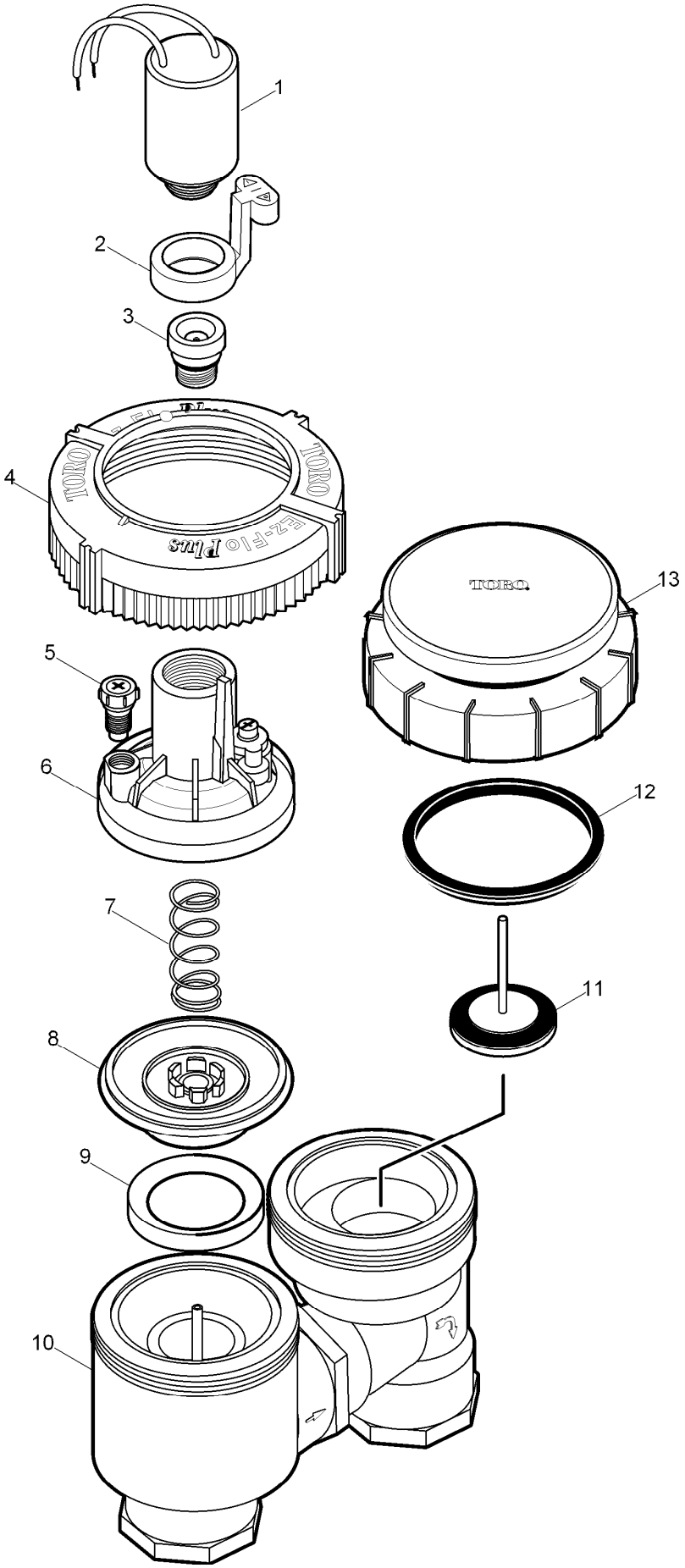

EZ-Flo Plus AVB Series, 3/4 Inch and 1 Inch (continued)

Ref.	Part Number	Qty.	Description
1	118-5982	1	Solenoid Assy. With Plunger, 24 Vac, 60 Hz
1	102-7054	1	Solenoid Assy. With Plunger, 24 Vac, 50 Hz
2	1081501	1	Handle, Bleed Plug
3	102-1197	1	Bleed Plug Assy., New
4	102-1717	1	Cover Nut
5	1081401	1	External Bleed Screw
6	1115004	1	Cover Assy. (For Flow Control Models)
7	204A-37	1	Spring
8	138802	1	Diaphragm Assy.
9	1116602	1	Divider (P/N 1116602 Divider [brown] Will Be Changed To P/N 1116601 [black])
10		1	Body Assy, 3/4", Npt ●
10		1	Body Assy, 1", Npt ●
11	1088001	1	Stem Assy., 3/4"
11	1018601	1	Stem Assy., 1"
12	595901	1	Seal, Anti-Siphon Cover, 3/4"
12	655401	1	Seal, Anti-Siphon Cover, 1"
13	217107-H	1	Shield/Cover Assy., 3/4"
13	519111	1	Shield/Cover Assy., 1"

● Not serviced separately

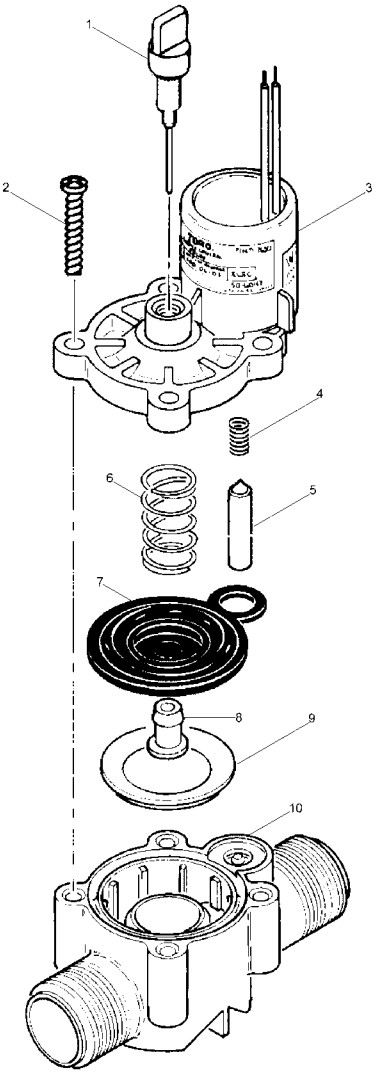

264 Series, 3/4 Inch Valves

Ref.	*Part Number*	*Qty.*	*Description*
1	35-4889	1	Bleed Screw Assy. With Pin
2	363-1493	4	Screw, #10 X 1
3	9-7413	1	Cap Assy.
4	9-6148	1	Spring-Plunger, Solenoid, El
5	9-6527	1	Plunger Assy., El
6	9-7619	1	Spring, Diaphragm
7	35-8941	1	Diaphragm Assy. (Includes Item 8)
8		1	Plug, Metering, Diaphragm ●
9	9-7835	1	Support, Diaphragm
10	9-7992	1	Body, Valve

● Not serviced separately

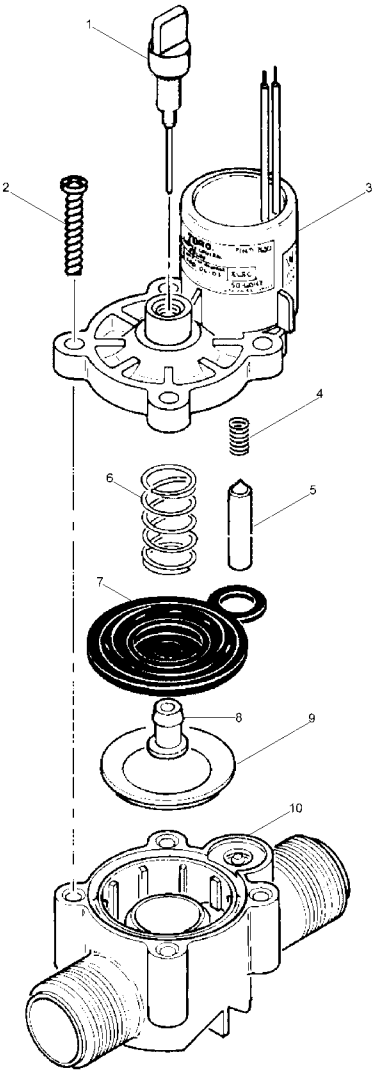

264 Series, 3/4 Inch Valves (continued)

● Not serviced separately

264 Series, 1 Inch Valve

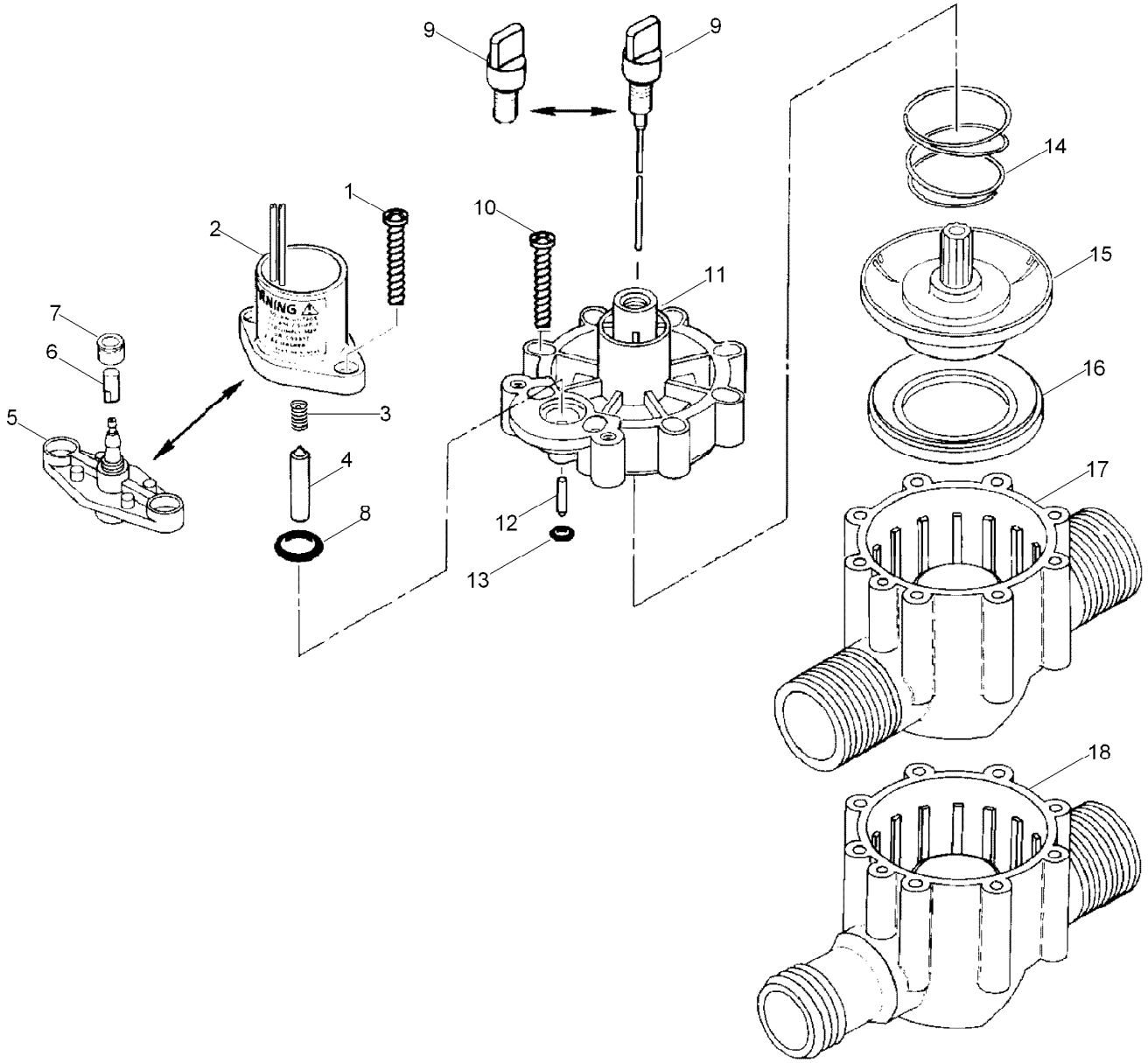

264 Series, 1 Inch Valve (continued)

Ref.	Part Number	Qty.	Description
1	363-1493	2	Screw, #10 X 1
2		1	Solenoid Assy., El (See Service Item 89-0878) ▲
3	9-6148	1	Spring-Plunger, Solenoid, El
4	9-6527	1	Plunger Assy., El
5	35-3776	1	Adapter Assy., No
6	89-8157	1	Cap, 1/4", Poly, No
7	900-40	1	Retainer, Tube, Pr And Cr ◆
8	2-9652	1	O-Ring, 7/16" X 5/8", No (As568-111)
9		1	Bleed Screw, No ▲
9	35-2941	1	Bleed Screw Assy., El, Fast-Closing
10	363-4007	8	Screw, #10 X 1.25"
11	9-8313	1	Cap, Valve W/O Fc, El
11	9-7291	1	Cap, Valve, W/O Fc, No And Pt
12	3-2016	1	Shaft, Idler, Lower, No And Pt
13	1-2035	1	O-Ring, El, Pr And Cr (0.070" X 0.114" X 0.254") (As568-006)
14	9-7110	1	Spring, Diaphragm, El And No
15	35-2824	1	Diaphragm ASM, 1", El
15	35-2943	1	Diaphragm Assy., 1", No Hyd
16	9-6331	1	Support, Diaphragm
17	9-8311	1	Body, M X M, 1", Npt
18		1	Body, M X B, 1", Npt ▲
	89-0878		Solenoid And Plunger Assy., El (Includes Items 2-4) ● ■
	35-9354		Bleed Screw Assy., El, Slow-Closing ● ■

● SERVICE ITEMS
▲ Not serviced separately
◆ Order Through Finished Goods Distribution System - Minneapolis
■ Not illustrated

254 Series, 1 Inch Valves

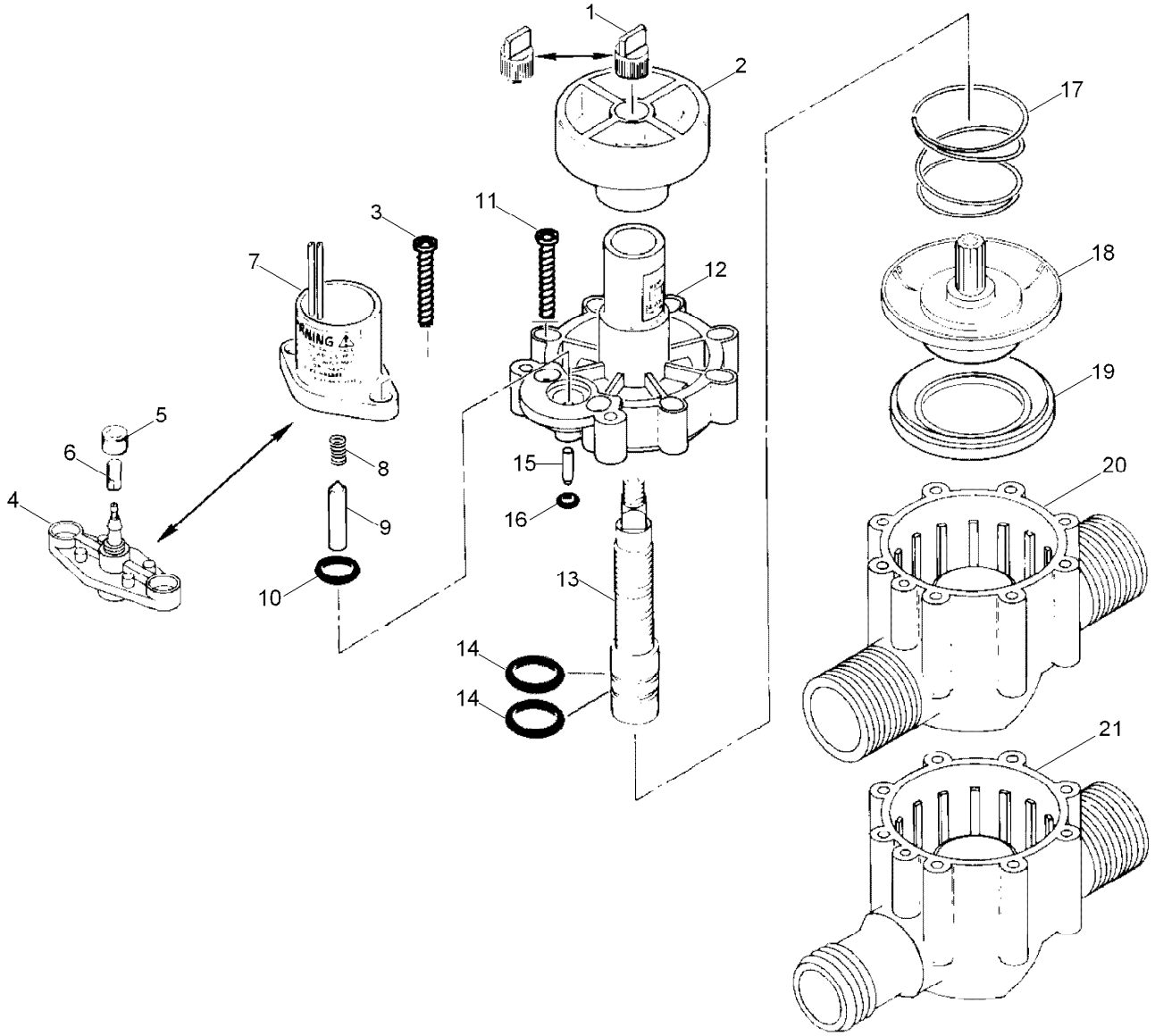

254 Series, 1 Inch Valves (continued)

Ref.	Part Number	Qty.	Description
1	35-4521	1	Bleed Cap ASM, W/ Pin, El, Fast Closing
1	35-1748	1	Bleed Cap ASM, W/O Pin, No And Pt
2	35-3777	1	Knob, Handle, Cross
3	363-1493	2	Screw, #10 X 1
4	35-3776	1	Adapter Assy., No
5	900-40	1	Retainer, Tube, Pr And Cr ◆
6	89-8157	1	Cap, 1/4", Poly, No
7		1	Solenoid Assy., El (See Service Item 89-0878) ▲
8	9-6148	1	Spring-Plunger, Solenoid, El
9	9-6527	1	Plunger Assy., El
10	2-9652	1	O-Ring, 7/16" X 5/8", No (As568-111)
11	363-4007	8	Screw, #10 X 1.25"
12		1	Cap, Valve, W/Fc, El, Fast-Closing ▲
12		1	Cap Assy. W/Fc, No ▲
13	35-1983	1	Stem-Flow Control
14	360-0220	2	O-Ring (0.070 X 0.551 X 0.691) (As568-015)
15	3-2016	1	Shaft, Idler, Lower, No And Pt
16	1-2035	1	O-Ring, El, Pr And Cr (0.070" X 0.114" X 0.254") (As568-006)
17	9-7110	1	Spring, Diaphragm, El And No
18	35-2943	1	Diaphragm Assy., 1", No Hyd
18	35-2824	1	Diaphragm ASM, 1", El
19	9-6331	1	Support, Diaphragm
20	9-8311	1	Body, M X M, 1", Npt
21		1	Body Assy., M X B, 1" ▲
	89-0878		Solenoid And Plunger Assy., El (Include Items 7-9) ●■
	35-0767		Cap Assy., W/Flow Control, No (Includes Items 12-14) ●■
	35-9346		Bleed Cap ASM, W/Pin, Slow-Closing ●■
	9-8182		Cap, Valve, W/Fc, El (Includes Items 12-14) ●■

● SERVICE ITEMS
▲ Not serviced separately
◆ Order Through Finished Goods Distribution System - Minneapolis
■ Not illustrated

250 Series, 1 Inch Valve

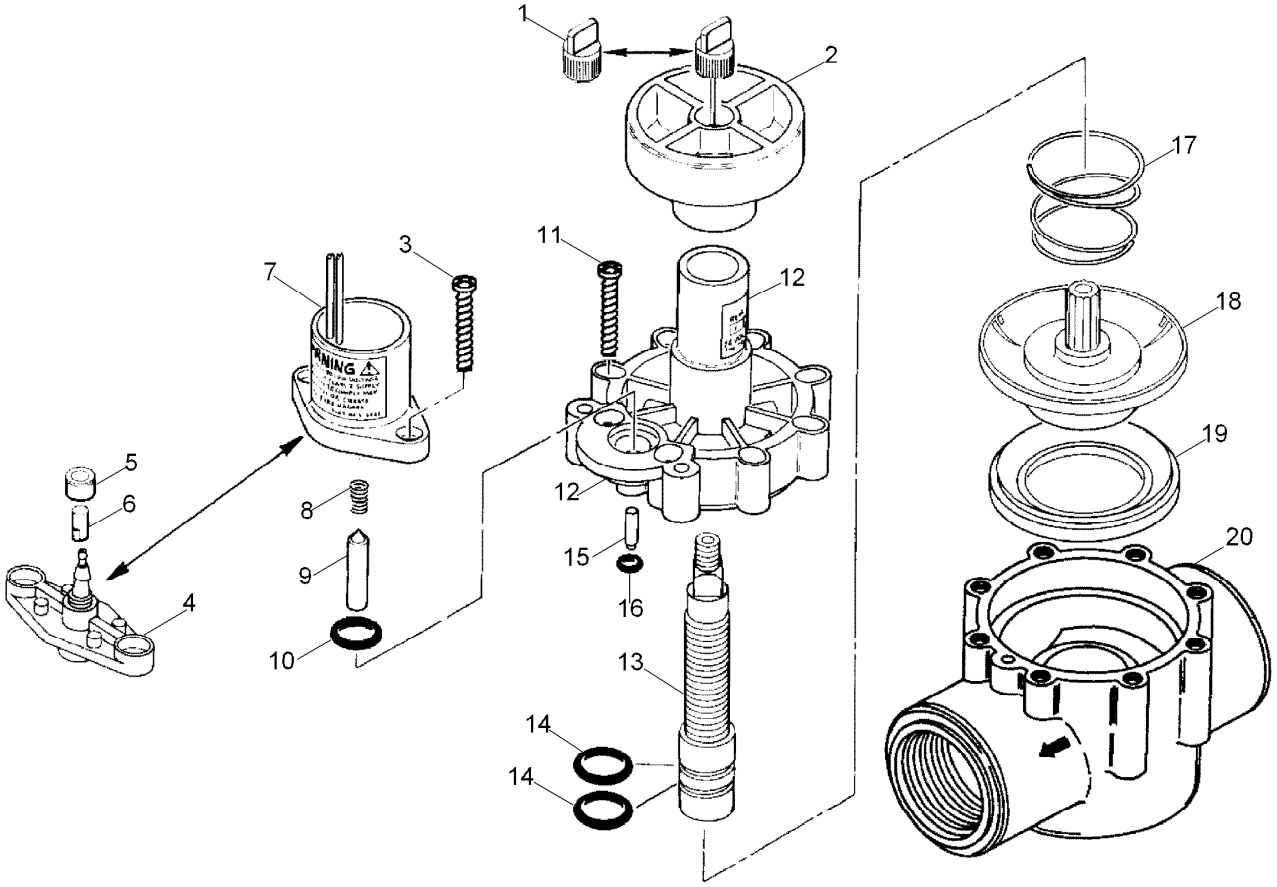

250 Series, 1 Inch Valve (continued)

Ref.	Part Number	Qty.	Description
1	35-4521	1	Bleed Cap ASM, W/ Pin, El, Fast Closing
1	35-1748	1	Bleed Cap ASM, W/O Pin, No And Pt
1	89-7855	1	Bleed Cap ASM, W/O Pin, No And Pt, Effluent
2	35-3777	1	Knob, Handle, Cross
3	363-1493	2	Screw, #10 X 1
4	35-3776	1	Adapter Assy., No
5	900-40	1	Retainer, Tube, Pr And Cr ❑
6	89-8157	1	Cap, 1/4", Poly, No
7		1	Solenoid Assy., El (See Service Item 89-0878) ▲
8	9-6148	1	Spring-Plunger, Solenoid, El
9	9-6527	1	Plunger Assy., El
10	2-9652	1	O-Ring, 7/16" X 5/8", No (As568-111)
11	363-1493	8	Screw, #10 X 1
12		1	Cap Assy., El (See Service Item 9-8182) ▲
12		1	Cap Assy., No & Pt (See Service Item 35-0767) ▲
13	35-1983	1	Stem-Flow Control
14	360-0220	2	O-Ring (0.070 X 0.551 X 0.691) (As568-015)
15	3-2016	1	Shaft, Idler, Lower, No And Pt
16	1-2035	1	O-Ring, El, Pr And Cr (0.070" X 0.114" X 0.254") (As568-006)
17	9-4425	1	Spring, Diaphragm, Pt
17	9-7110	1	Spring, Diaphragm, El And No
18	35-2943	1	Diaphragm Assy., 1", No Hyd
18	35-2824	1	Diaphragm ASM, 1", El
18	35-3655	1	Diaphragm Assy., 1", Pt
19	9-6331	1	Support, Diaphragm
20		1	Body Assy., In-Line Globe, Npt ▲
20	35-1970	1	Body Assy., In-Line Globe, Bsp
	89-0878		Solenoid And Plunger Assy., El (Includes Items 7-9) ●■
	35-3503		Diaphragm ASM, El, Service Kit ◆■
			Screen, Filter, 3/4" (Use With 35-3503 Diaphragm Assy) ●■▲
	9-6548		Plug, Communication, Diaphragm (Use With 35-3655 Diaphragm Assy., Pt) ●■
	9-8182		Cap, Valve, W/Fc, El (Includes Items 12-14) ●■
	35-0767		Cap Assy., No Nd Pt (Includes Items 12-14) ●■
	35-9346		Bleed Cap ASM, W/Pin, Slow-Closing ●■

● SERVICE ITEMS
▲ Not serviced separately
❑ Order Through Finished Goods Distribution System - Minneapolis
■ Not illustrated
◆ (See Service Items: Nozzle/Stator Assy.)

260 Series, 1 Inch Valve

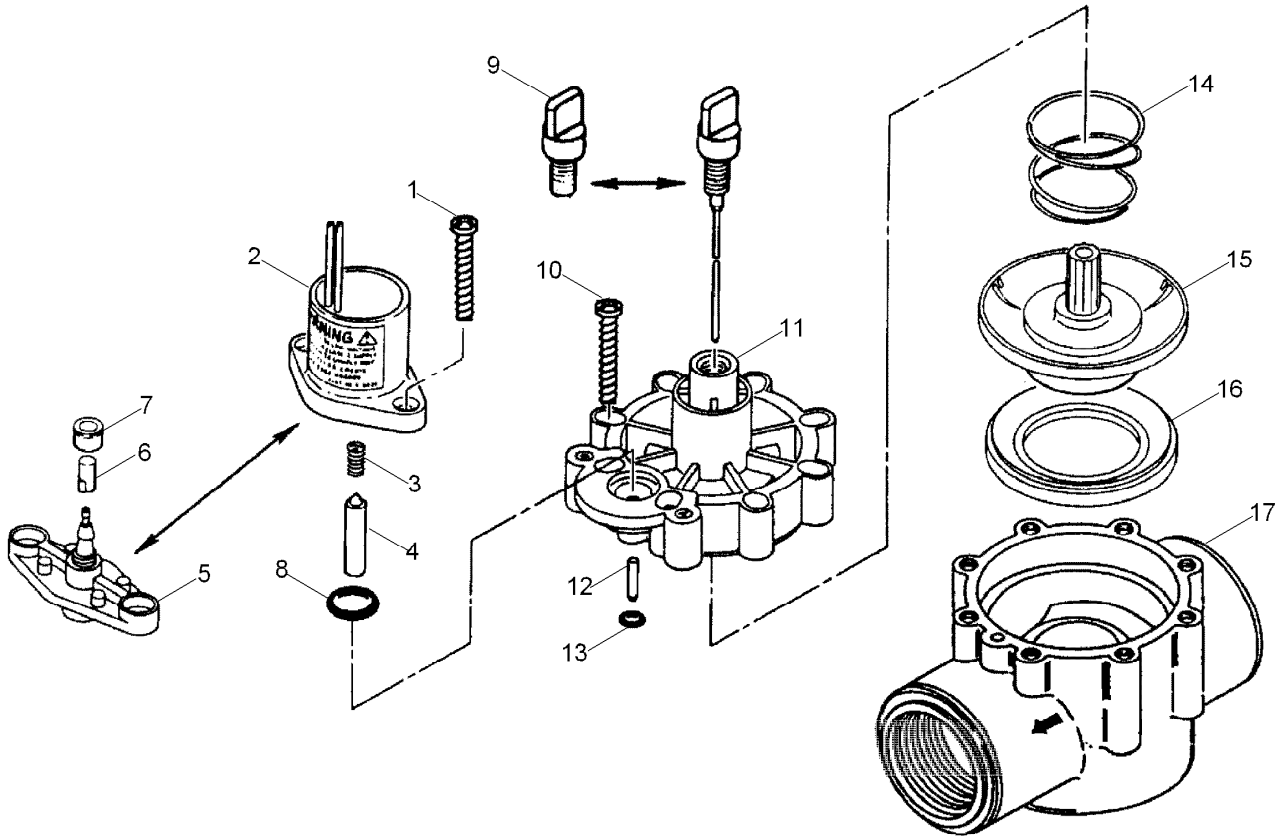

260 Series, 1 Inch Valve (continued)

Ref.	Part Number	Qty.	Description
1	363-1493	2	Screw, #10 X 1
2		1	Solenoid Assy. (See Service Item 89-0878) ▲
3	9-6148	1	Spring-Plunger, Solenoid, El
4	9-6527	1	Plunger Assy., El
5	35-3776	1	Adapter Assy., No
6	89-8157	1	Cap, 1/4", Poly, No
7	900-40	1	Retainer, Tube, Pr And Cr ◆
8	2-9652	1	O-Ring, 7/16" X 5/8", No (As568-111)
9	35-2941	1	Bleed Screw Assy., El, Fast-Closing
9		1	Bleed Screw, No & Pt ▲
10	363-1493	8	Screw, #10 X 1
11	9-8313	1	Cap, Valve W/O Fc, El
11	9-7291	1	Cap, Valve, W/O Fc, No And Pt
12	3-2016	1	Shaft, Idler, Lower, No And Pt
13	1-2035	1	O-Ring, El, Pr And Cr (0.070" X 0.114" X 0.254") (As568-006)
14	9-7110	1	Spring, Diaphragm, El And No
14	9-4425	1	Spring, Diaphragm, Pt
15	35-2943	1	Diaphragm Assy., 1", No Hyd
15	35-2824	1	Diaphragm ASM, 1", El
15	35-3655	1	Diaphragm Assy., 1", Pt
16	9-6331	1	Support, Diaphragm
17		1	Body Assy., Globe, Npt ▲
17	35-1970	1	Body Assy., In-Line Globe, Bsp
	89-0878		Solenoid And Plunger Assy., El (Includes Items 2-4) ● ■
	35-3503		Diaphragm ASM, El, Service Kit ● ■
			Screen, Filter, 3/4" (Use With 35-3503 Diaphragm Assy) ● ■ ▲
	9-6548		Plug, Communication, Diaphragm (Used With 35-3655) ● ■
	35-9354		Bleed Screw Assy., El, Slow-Closing ● ■
	9-6548		Plug, Communication, Diaphragm (Used With 35-3655) ● ■
	35-9354		Bleed Screw Assy., El, Slow-Closing ● ■

● SERVICE ITEMS
▲ Not serviced separately
◆ Order Through Finished Goods Distribution System - Minneapolis
■ Not illustrated

252 Series, 1 Inch Valves

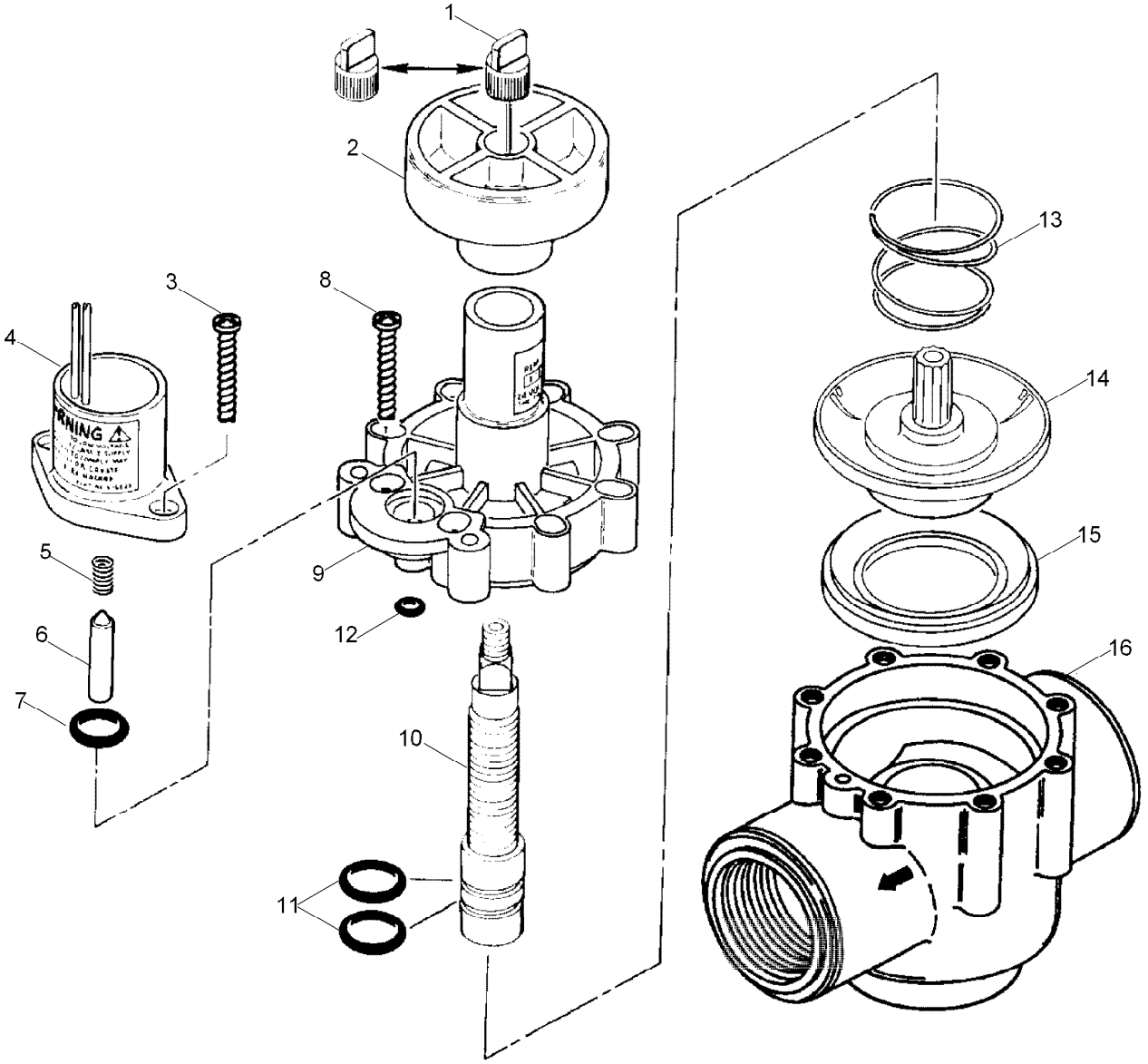

252 Series, 1 Inch Valves (continued)

Ref.	Part Number	Qty.	Description
1	35-4521	1	Bleed Cap ASM, W/ Pin, El, Fast Closing
1	35-1748	1	Bleed Cap ASM, W/O Pin, No And Pt
2	35-3777	1	Knob, Handle, Cross
3	363-1493	2	Screw, #10 X 1
4		1	Solenoid Assy. (See Service Item 89-0878) ▲
5	9-6148	1	Spring-Plunger, Solenoid, El
6	9-6527	1	Plunger Assy., El
7	2-9652	1	O-Ring, 7/16" X 5/8", No (As568-111)
8	363-1493	8	Screw, #10 X 1
9		1	Cap Assy., El, W/Fc (See Service Item 35-8182) ▲
10	35-1983	1	Stem-Flow Control
11	360-0220	2	O-Ring (0.070 X 0.551 X 0.691) (As568-015)
12	1-2035	1	O-Ring, El, Pr And Cr (0.070" X 0.114" X 0.254") (As568-006)
13	9-7110	1	Spring, Diaphragm, El And No
14	35-2824	1	Diaphragm ASM, 1", El
15	9-6331	1	Support, Diaphragm
16		1	Body Assy., 1", Npt ▲
16		1	Body Assy., 1", Bsp ▲
N/I		1	Plug, Pipe, 1" ▲ ■
	89-7855		Bleed Cap ASM, W/O Pin, No And Pt, Effluent ● ■
	89-0878		Solenoid And Plunger Assy., El (Includes Items 4-6) ● ■
	9-8182		Cap Assy. (Includes Items 9-11) ● ■
	35-3503		Diaphragm ASM, El, Service Kit ● ■
			Screen, Filter, 3/4" (Use With 35-3503 Diaphragm Assy) ● ▲ ■
	35-9346		Bleed Cap ASM, W/Pin, Slow-Closing ● ■

● SERVICE ITEMS
▲ Not serviced separately
■ Not illustrated

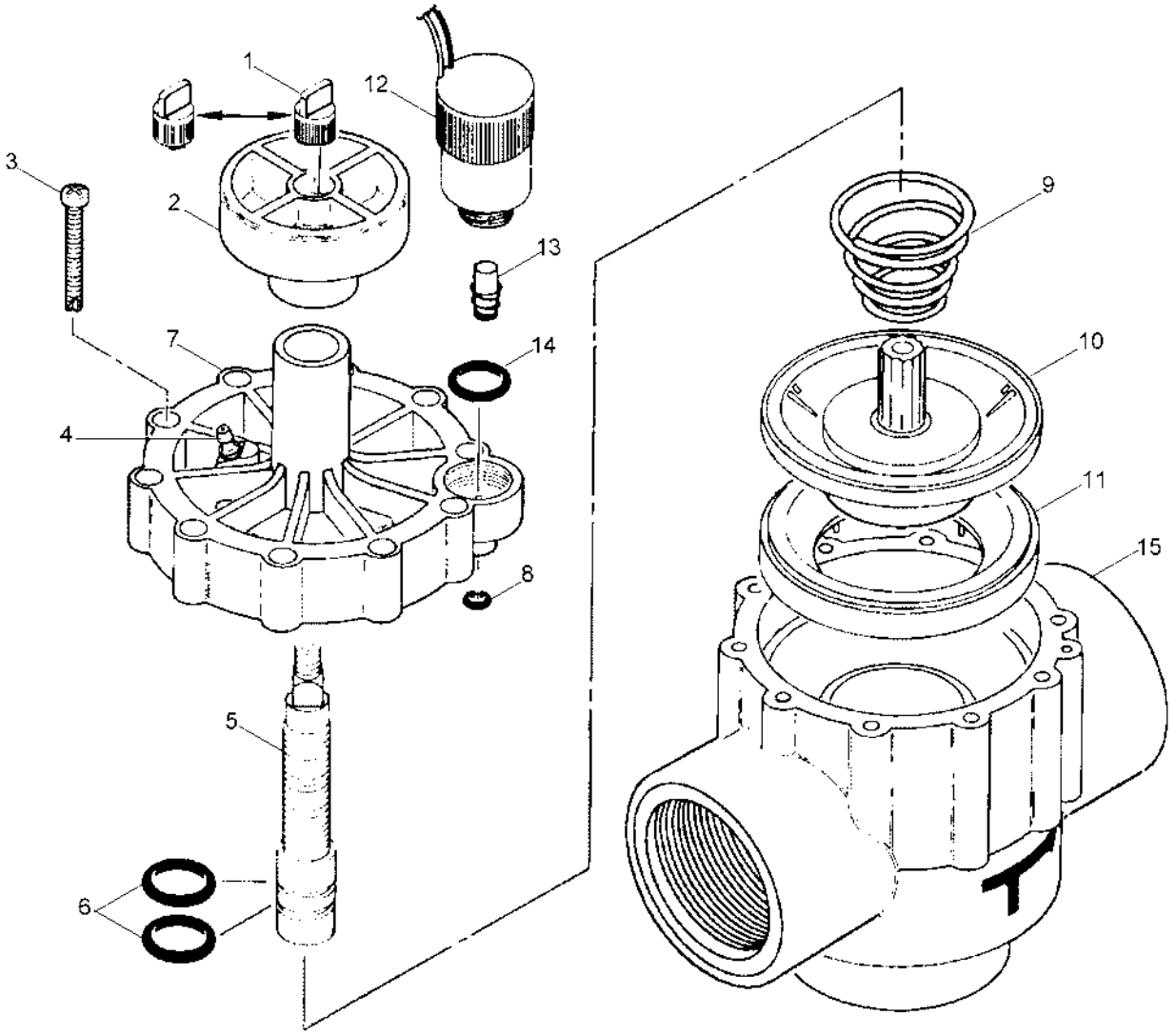

252 Series, 1.5 Inch (Sheet 1 of 2)

Ref.	Part Number	Qty.	Description
1	35-4521	1	Bleed Cap ASM, W/ Pin, El, Fast Closing
1	35-1748	1	Bleed Cap ASM, W/O Pin, No And Pt
1	89-7855	1	Bleed Cap ASM, W/O Pin, No And Pt, Effluent
2	35-3777	1	Knob, Handle, Cross
3	360-0203	10	Screw, Tap, #10-25 X 1-3/4, Sst
4		1	Cap, Valve, El ●
4		1	Cap, Valve, No & Pt (See Service Items) ●
4		1	Cap, Valve, Pr (See Service Items) ●
4		1	Cap, Valve, Cr (See Service Items) ●
5	35-1983	1	Stem-Flow Control

Ref.	Part Number	Qty.	Description
6	360-0220	2	O-Ring (0.070 X 0.551 X 0.691) (As568-015)
7	9-6791	1	Connector, Poly, No And Pr
8	1-2035	1	O-Ring, El, Pr And Cr (0.070" X 0.114" X 0.254") (As568-006)
9	9-4425	1	Spring, Diaphragm, Pt
10	89-0812	1	Diaphragm ASM, El
10	89-0814	1	Diaphragm ASM, Pt
10	89-0813	1	Diaphragm ASM, No, Pr And Cr
11	89-6110	1	Support-Diaphragm
12	118-0248	1	Solenoid Assy., El, Pr And Cr
13	35-4609	1	Plunger ASM, El, Pr And Cr
14	360-0220	1	O-Ring (0.070 X 0.551 X 0.691) (As568-015)
15	9-7100	1	Body ASM, No And Pt, Npt

● Not serviced separately

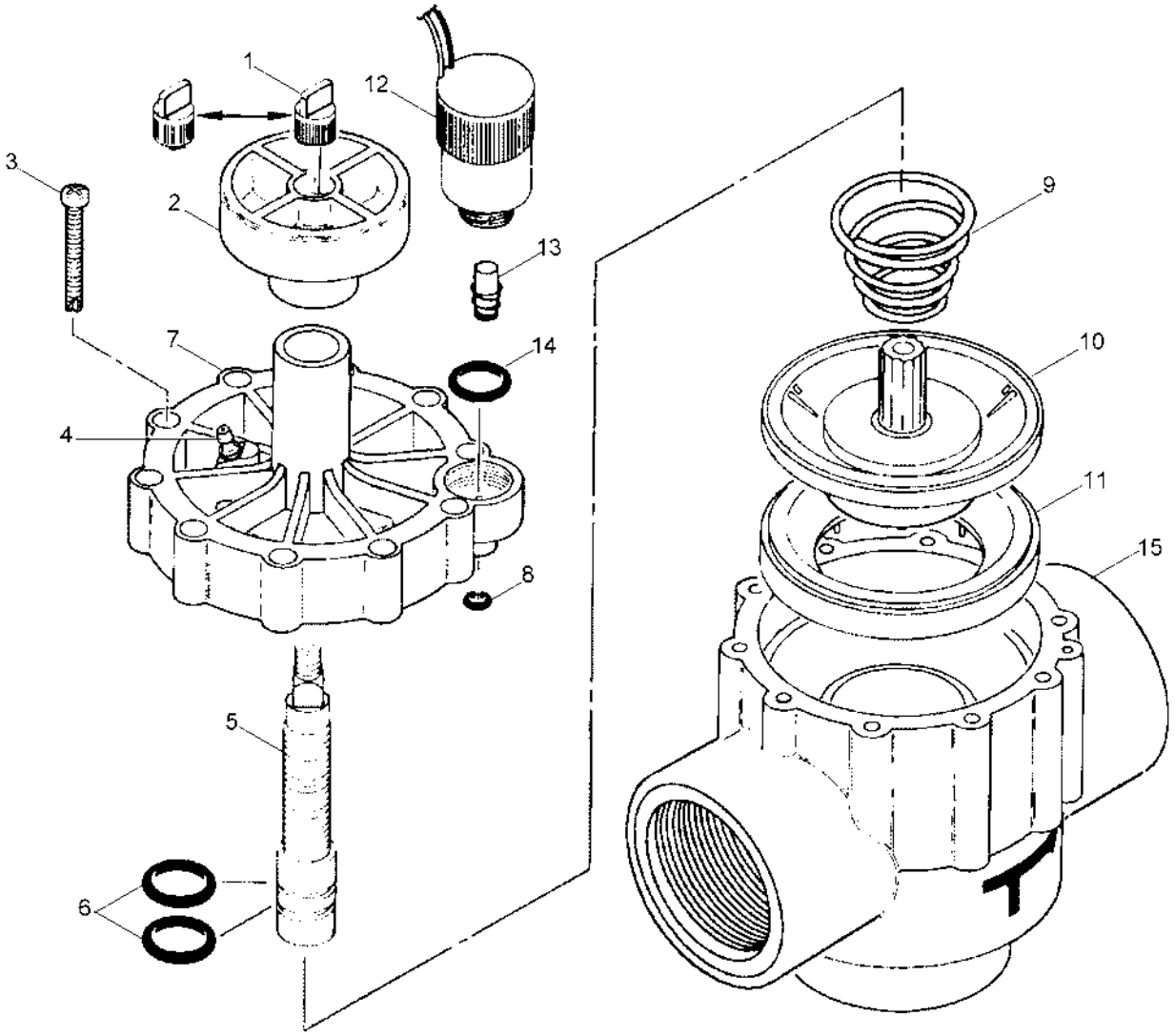

252 Series, 1.5 Inch (Sheet 1 of 2) (continued)

Ref.	Part Number	Qty.	Description
15	9-7238	1	Body ASM, El, Npt
15		1	Body Assy., No & Pt, Bsp ●
15	35-1973	1	Body ASM, El, Bsp
15	35-4937	1	Body ASM, Pr, Npt
15	35-5642	1	Body ASM, Pr, Bsp
15	89-4805	1	Body ASM, Cr, Npt
15	89-6036	1	Body ASM, Cr, Bsp

● Not serviced separately

252 Series, 1.5 Inch Valve (Sheet 2 of 2)

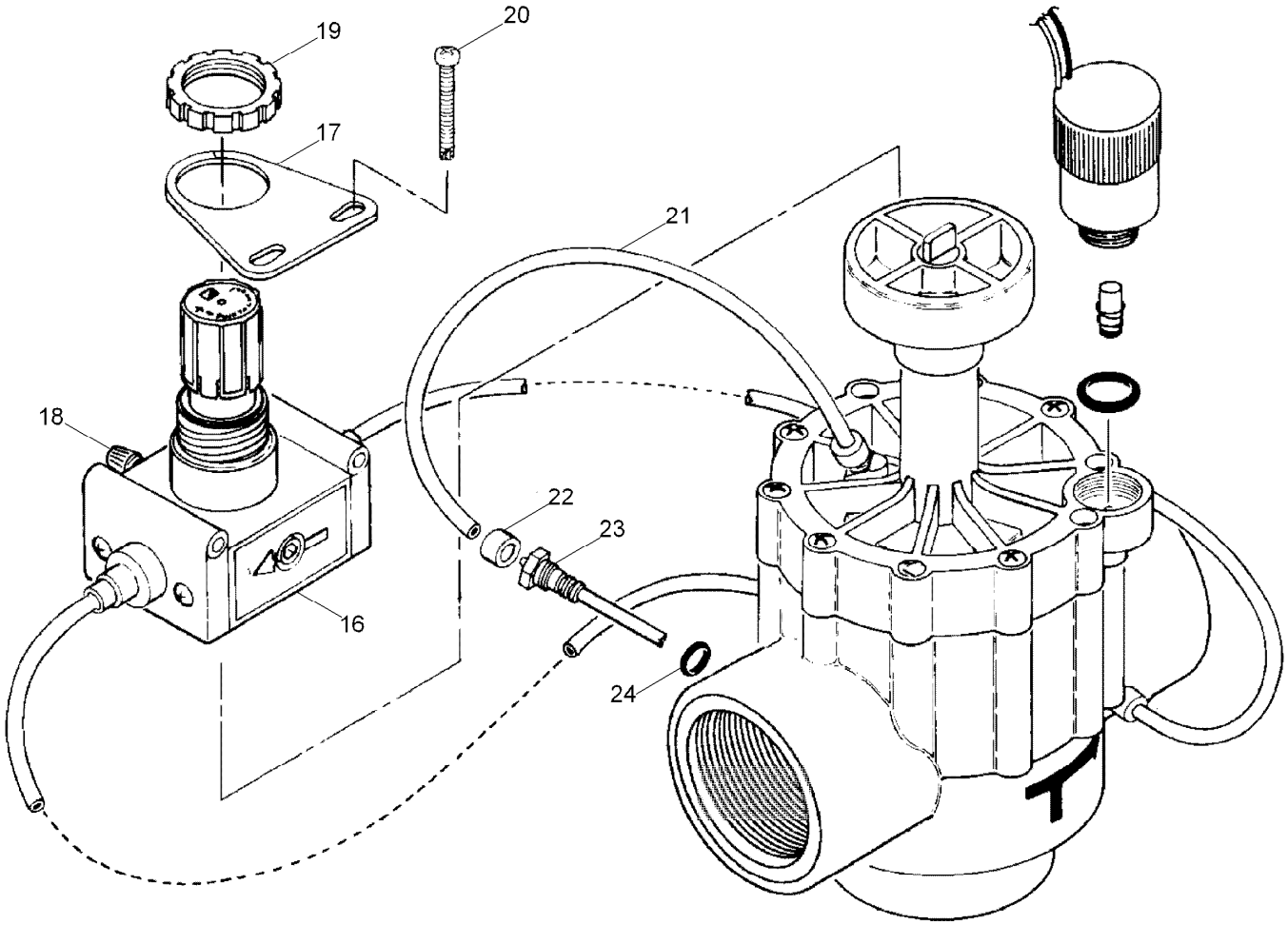

252 Series, 1.5 Inch Valve (Sheet 2 of 2) (continued)

Ref.	Part Number	Qty.	Description
16	363-3141	1	Regulator-Water Pressure, Plastic Valve, Pr
17	35-3444	1	Bracket, Regulator, Pr
18	363-1762	1	Valve, Schrader, 1/8", Pr, Npt
19	363-1894	1	Nut-Regulator, Pr
20	360-0203	2	Screw, Tap, #10-25 X 1-3/4, Sst
21	9-2623	3	Tube, 1/4" X 8", El
21	9-2624	1	Tubing, Poly, 1/4" X 11.5", Cr
22	900-40	6	Retainer, Tube, Pr And Cr ▲
23	35-4619	1	Filter Assy., 1/4", Regulator, Pr And Cr
24	360-0494	1	O-Ring (0.070" X 0.426" X 0 .566") Pr And Cr (As568-013)
	35-3099		Solenoid ASM, El And Pr And Cr ● ■
	89-8157		Cap, 1/4", Poly, No ● ■
	35-9346		Bleed Cap ASM, W/Pin, Slow-Closing ● ■
	35-0595		Cap ASM, Valve, El ● ■
	35-0769		Cap ASM, Valve, No And Pt ● ■
	35-4935		Cap ASM, Valve, Pr And Cr ● ■
	35-4926		Regulator ASM, Plastic Valve, Pr ● ■
	89-0817		Diaphragm Kit, 1.5, El ● ■
	89-0818		Diaphragm Kit, 1.5, No ● ■
	89-0814		Diaphragm ASM, Pt ● ■
	89-9453		Service Kit, Valve, 1.5, No ● ■
	89-3853		Service Kit, Valve, 1.5, El ● ■
	89-3892		Service Kit, Valve, 1.5, Pt ● ■

● SERVICE ITEMS
▲ Order Through Finished Goods Distribution System - Minneapolis
■ Not illustrated

252 Series, 2 Inch Valve (Sheet 1 of 2)

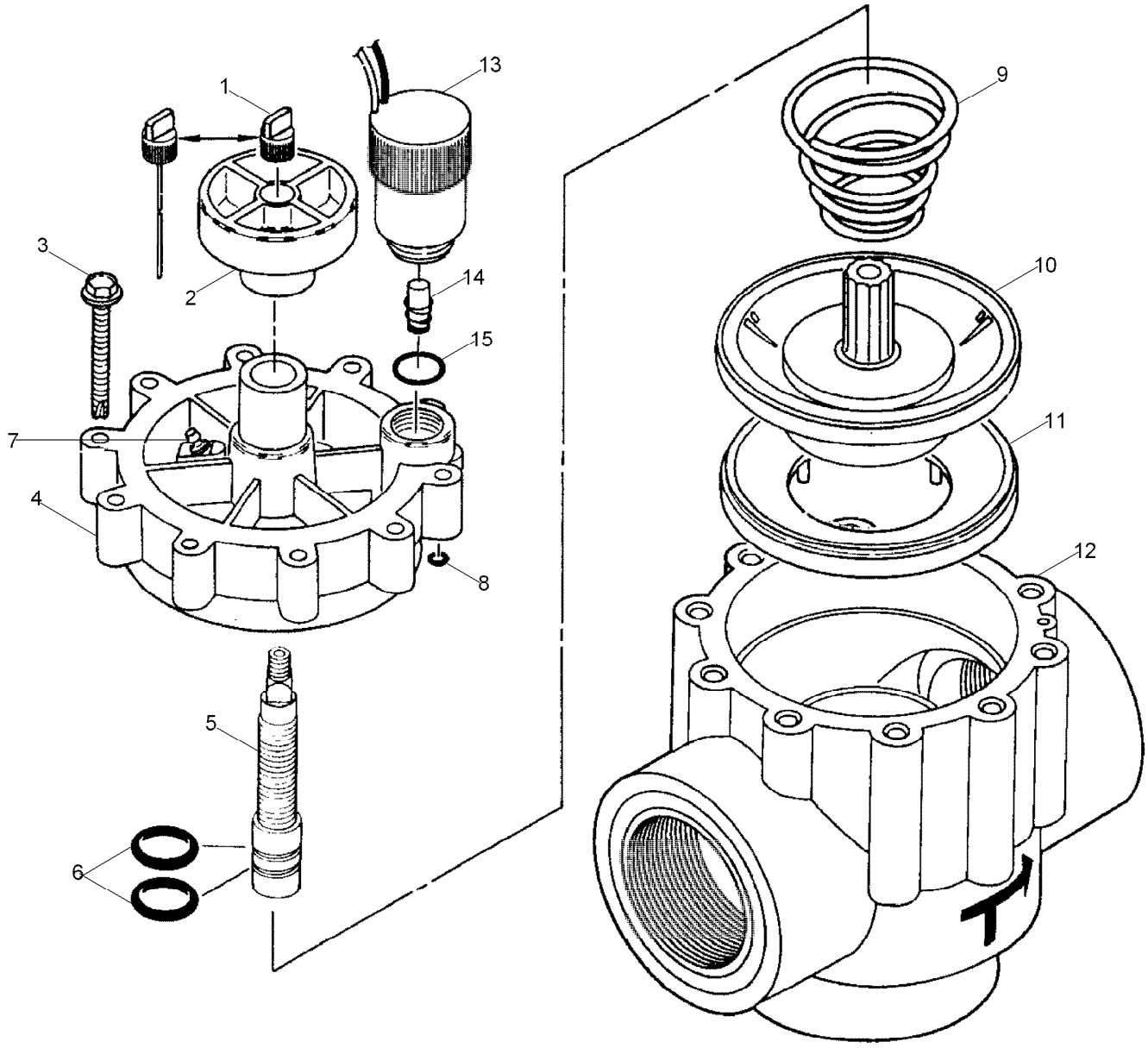

252 Series, 2 Inch Valve (Sheet 1 of 2) (continued)

Ref.	Part Number	Qty.	Description
1	35-3892	1	Bleed Cap Assy. With Pin, El
1	35-1748	1	Bleed Cap Assy., No, Pr And Cr
2	35-3777	1	Knob, Handle, Cross
3	363-1399	10	Screw-Hex, Washer, 1/4-14 X 2
4		1	Cap, Valve (See Service Items) ●
5	35-1983	1	Stem-Flow Control
6	360-0220	2	O-Ring (0.070 X 0.551 X 0.691) (As568-015)
7	9-6791	1	Connector, Poly, No And Pr
8	1-2035	1	O-Ring, El, Pr And Cr (0.070" X 0.114" X 0.254") (As568-006)
9	9-6940	1	Spring, Diaphragm, El, Pr And Cr
9	9-4425	1	Spring, Diaphragm, No
10	89-0815	1	Diaphragm ASM, El
10	89-0816	1	Diaphragm ASM, No, Pr And Cr
11	9-6504	1	Support-Diaphragm
12	9-7258	1	Body ASM, El And No, Npt
12	35-1974	1	Body ASM, El And No, Bsp
12	35-4943	1	Body ASM, Pr, Npt
12	35-5645	1	Body ASM, Pr, Bsp
12	89-4807	1	Body ASM, Cr, Npt
12		1	Body Assy., Cr, Bsp ●
13	118-0248	1	Solenoid (Red & Black Wires)
14	35-4609	1	Plunger ASM, El, Pr And Cr
15	360-0220	1	O-Ring (0.070 X 0.551 X 0.691) (As568-015)

● Not serviced separately

252 Series, 2 Inch Valve (Sheet 2 of 2)

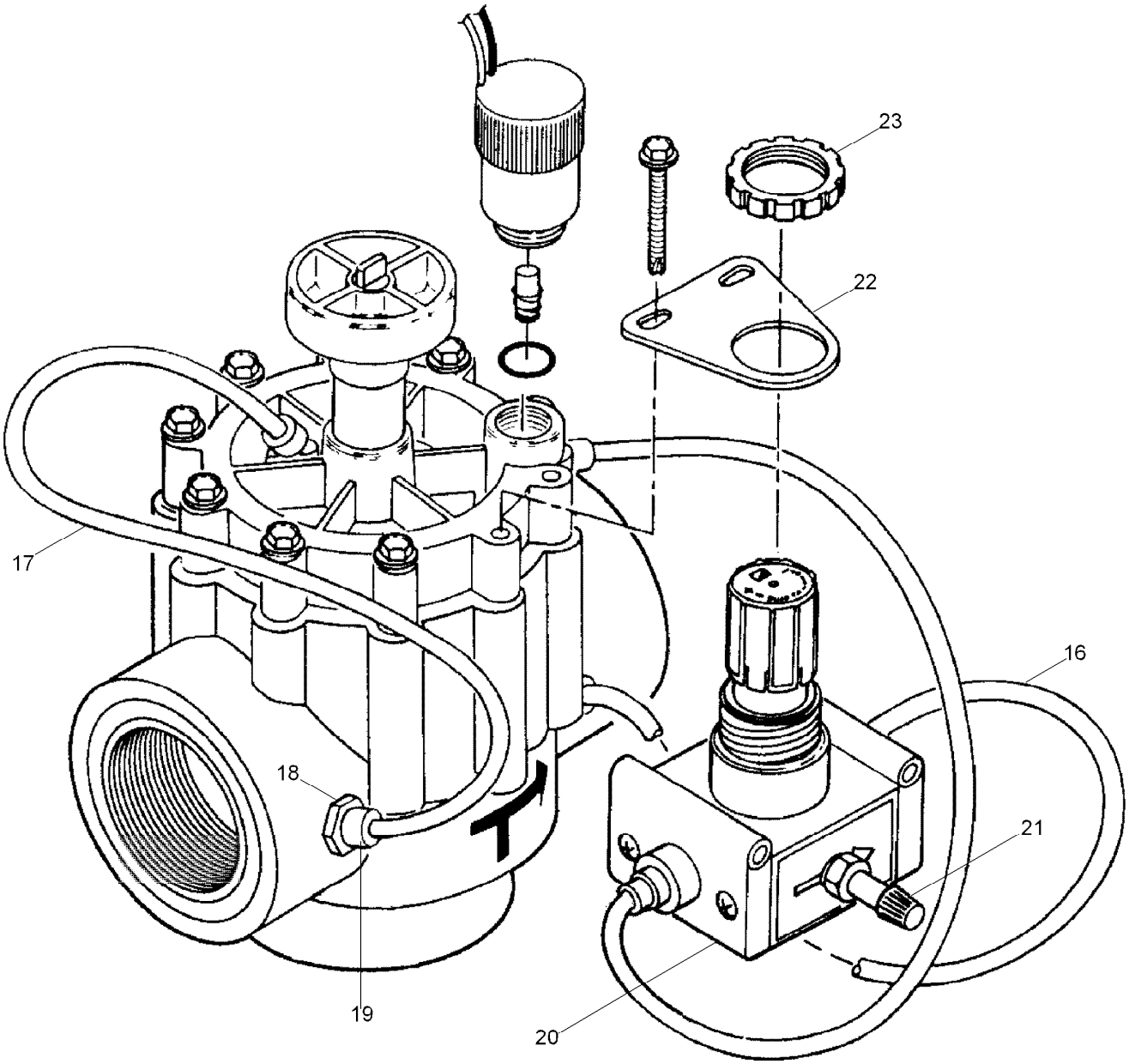

252 Series, 2 Inch Valve (Sheet 2 of 2) (continued)

Ref.	Part Number	Qty.	Description
16	9-2623		Tube, 1/4" X 8", El
17	9-1876		Tube, 1/4" X 12", Pr And Cr
18	35-4931		Filter ASM, Regulator, .034, Pr And Cr (Includes 0-Ring)
19	900-40		Retainer, Tube, Pr And Cr ▲
20	363-3141		Regulator-Water Pressure, Plastic Valve, Pr
21	363-1762		Valve, Schrader, 1/8", Pr, Npt
22	35-3444		Bracket, Regulator, Pr
23	363-1894		Nut-Regulator, Pr
	35-3099		Solenoid Assy., El And Pr (Includes Items 13 And 14) ●■
	102-1214		Plug, Pipe, 2", Bsp ●■
	89-3854		Diaphragm Kit, El, 232 Valve (Includes Items 10 And 11) ●■
	89-3855		Diaphragm Kit, El 232/252 Valves (Includes Items 10 And 11) ●■
	35-0596		Cap Assy., Valve, El (Includes Items 4-6) ●■
	35-0768		Cap Assy., Valve, No (Includes Items 4-7) ●■
	35-4940		Cap Assy., Valve, Pr (Includes Items 4-7) ●■
	35-4926		Regulator Assy., Vlave, Plastic, Pr (Includes Items 20-23) ●■
	89-0806		Bleed Screw, Fast, 2 Inch ● ■
	360-0494		O-Ring (0.070" X 0.426" X 0 .566") Pr And Cr (As568-013) ●■

● SERVICE ITEMS
▲ Order Through Finished Goods Distribution System - Minneapolis
■ Not illustrated

P-220 and P-220G Series, 1 Inch Valve

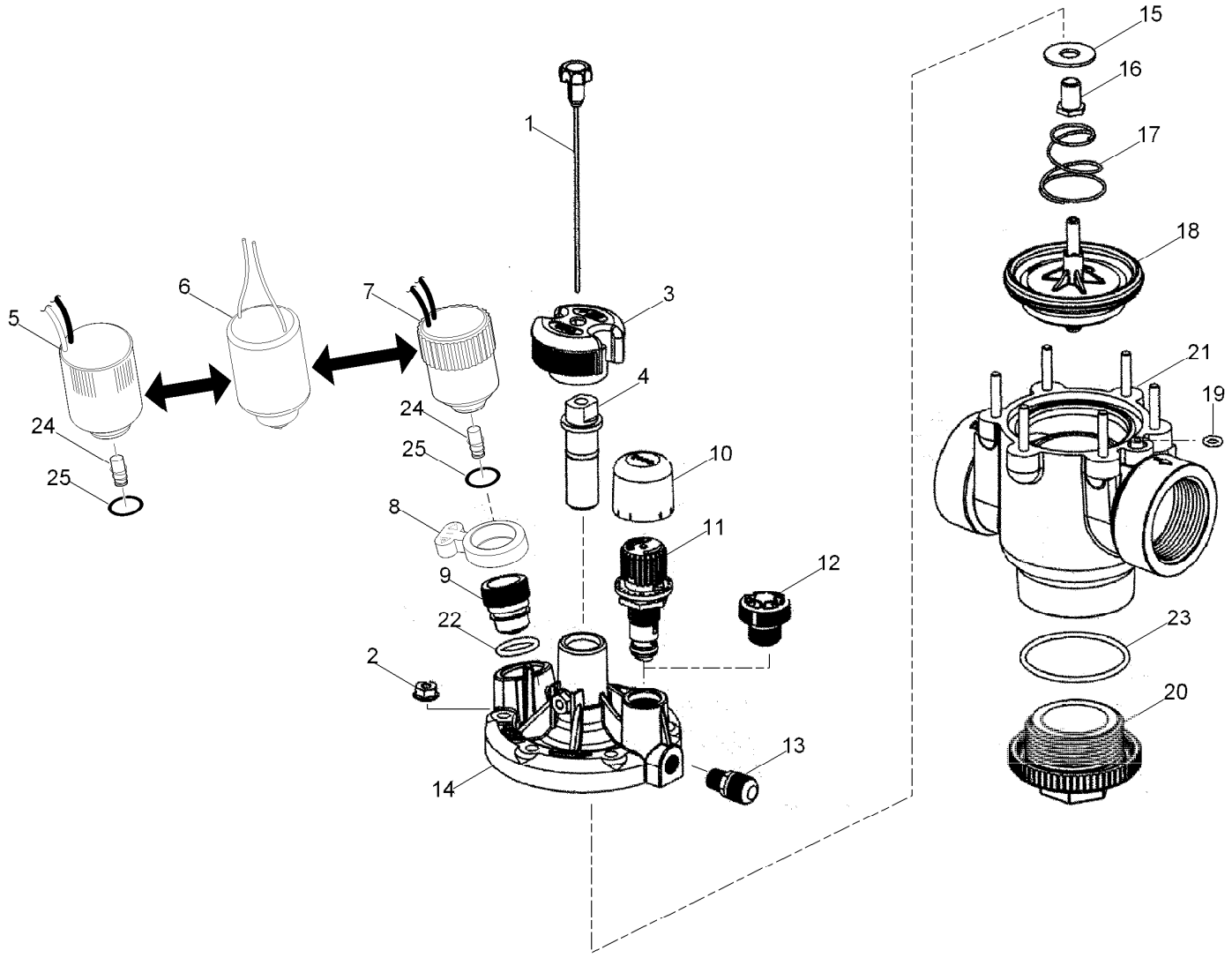

P-220 and P-220G Series, 1 Inch Valve (continued)

Ref.	Part Number	Qty.	Description
1	102-3756	1	Metering Rod Assy., P-220
2	118-1721	7	Hex Nut, Flanged
3	89-9780	1	Handle, Flow Control
4	102-0966	1	Stem Assy., Flow Control
5	102-2709	1	Solenoid Assy., 24Vdc, Latching
6	118-5982	1	Solenoid Assy. With Plunger, 24 Vac, 60 Hz
6	102-7054	1	Solenoid Assy. With Plunger, 24 Vac, 50 Hz
7	102-3443	1	Solenoid-Low Wattage, W/Surge Protection (Black Wires)
8	606902	1	Handle, Bleed Plug
9	102-4787	1	Bleed Plug
10	835203	1	Cap, Vandal Resistant (Pressure Regulating Models Only)
11	EZR-30	1	Regulator Module, 30 Psi (Includes Item 10) ◆
11	EZR-100	1	Regulator Module, 100 Psi (Includes Item 10) ◆

Ref.	Part Number	Qty.	Description
12	89-9521	1	Blanking Plug Assy. (Non-Pressure Regulating Models Only))
13	834101	1	Valve Assy., Schrader
14	102-0366	1	Bonnet Assy.
15	856202	1	Stem Washer
16	1033-H	1	Bushing
17	H1040	1	Spring
18	102-0368	1	Diaphragm Assy.
19	1054-H	1	O-Ring, Body
20	536203	1	Plug, Body, Npt & Bsp
21		1	Valve Body Assy. ▲
22	1009701	1	O-Ring, Bleed Plug
23	2413	1	O-Ring, Body Plug
24	89-9562	1	Plunger Assy. (Used With Items 5 And 7)
25	360-0220	1	O-Ring (0.070 X 0.551 X 0.691) (Used With Items 5 And 7)
	102-0847		Assy., Kit, Service, 1" & 1.5", P-220 (Includes Items 2-4, 12-14 And 17) ●■

● SERVICE ITEMS
▲ Not serviced separately
◆ Order Through Finished Goods Distribution System - Minneapolis
■ Not illustrated

P-220 and P-220G Series, 1.5 Inch Valve

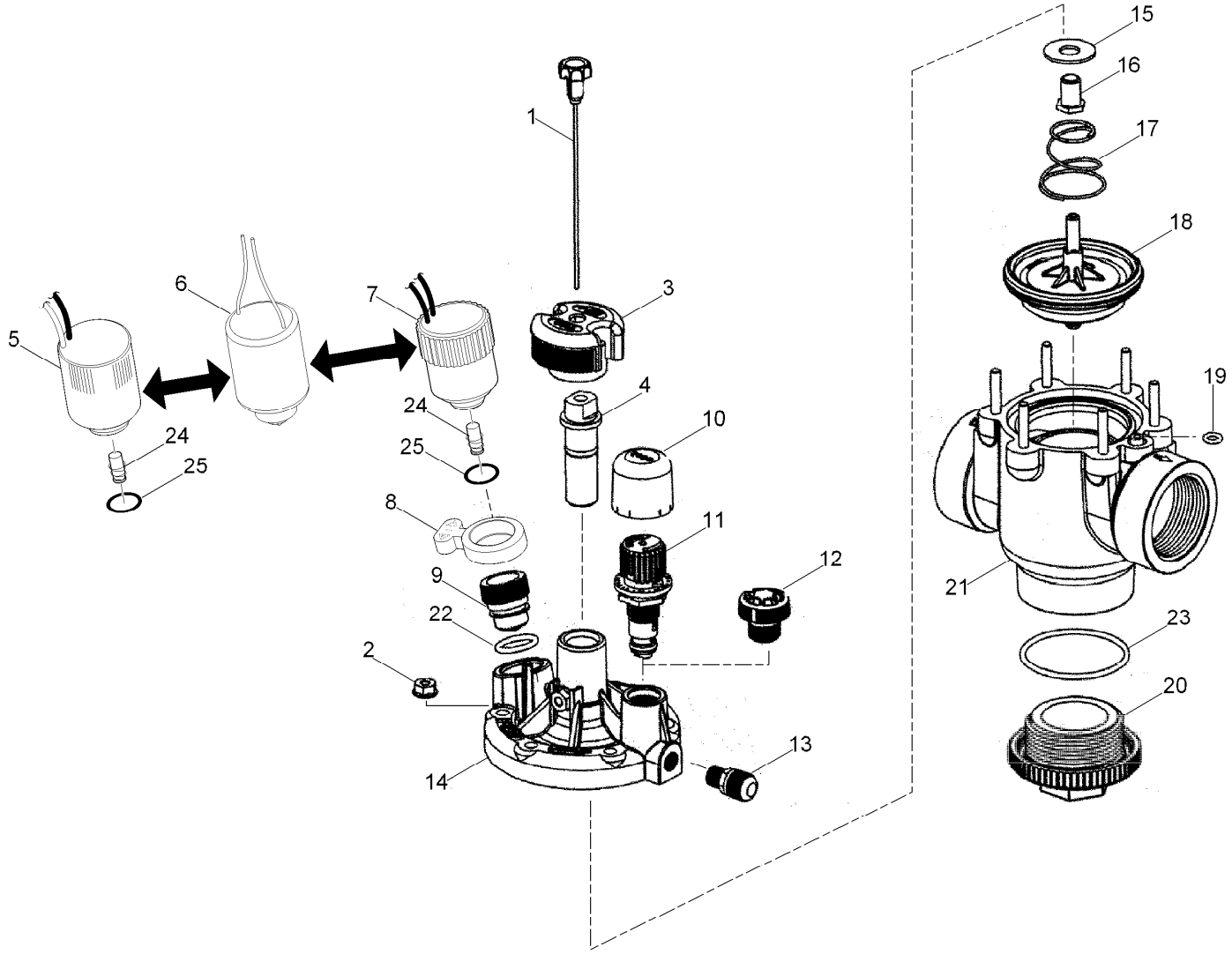

P-220 and P-220G Series, 1.5 Inch Valve (continued)

Ref.	Part Number	Qty.	Description
1	102-3756	1	Metering Rod Assy., P-220
2	118-1721	7	Hex Nut, Flanged
3	89-9780	1	Handle, Flow Control
4	102-0966	1	Stem Assy., Flow Control
5	102-2709	1	Solenoid Assy., 24Vdc, Latching
6	118-5982	4	Solenoid Assy. With Plunger, 24 Vac, 60 Hz
6	102-7054	1	Solenoid Assy. With Plunger, 24 Vac, 50 Hz
7	102-3443	1	Solenoid-Low Wattage, W/Surge Protection (Black Wires)
8	606902	1	Handle, Bleed Plug
9	102-4787	1	Bleed Plug
10	835203	1	Cap, Vandal Resistant (Pressure Regulating Models Only)
11	EZR-30	1	Regulator Module, 30 Psi (Includes Item 10) (Pressure Regulating Models Only) ◆
11	EZR-100	1	Regulator Module, 100 Psi (Includes Item 10) (Pressure Regulating Models Only) ◆
12	89-9521	1	Blanking Plug Assy. (Non-Pressure Regulating Models Only)
13	834101	1	Valve Assy., Schrader
14	102-0366	1	Bonnet Assy.
15	856202	1	Stem Washer
16	1033-H	1	Bushing
17	H1040	1	Spring
18	102-0770	1	Diaphragm Assy.
19	1054-H	1	O-Ring, Body
20	209406	1	Plug, Body, Npt & Bsp
21		1	Valve Body Assy. ▲
22	1009701	1	O-Ring, Bleed Plug
23	363-4764	1	O-Ring, Body Plug
24	89-9562	1	Plunger Assy. (Used With Items 5 And 7)
25	360-0220	1	O-Ring, 0.070" X 0.551" X 0.691", El And Pr (Used With Items 5 And 7)
	102-0847		Assy., Kit, Service, 1" & 1.5", P-220 (Includes Items 2-4, 12-14 And 17) ●■

● SERVICE ITEMS
▲ Not serviced separately
◆ Order Through Finished Goods Distribution System - Minneapolis
■ Not illustrated

P-220, P-220G and Scrubber Series - 2 Inch Valve

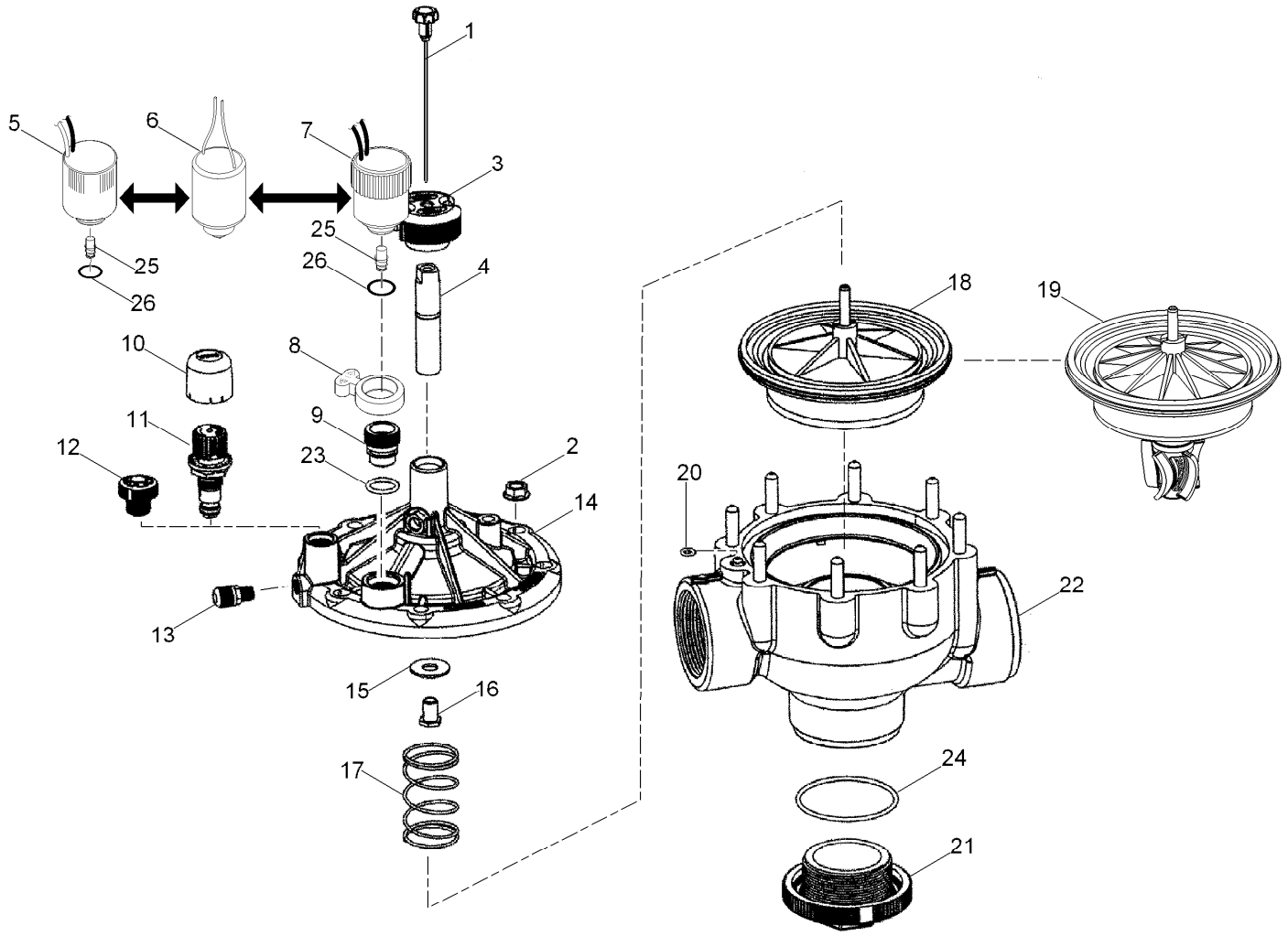

P-220, P-220G and Scrubber Series - 2 Inch Valve (continued)

Ref.	Part Number	Qty.	Description
1	102-0943	1	Metering Rod Assy., P-220
2	118-1722	9	Hex Nut, Flanged
3	89-9780	1	Handle, Flow Control
4	102-0967	1	Stem Assy., Flow Control
5	102-2709	1	Solenoid Assy., 24Vdc, Latching
6	118-5982	1	Solenoid Assy. With Plunger, 24 Vac, 60 Hz
6	102-7054	1	Solenoid Assy. With Plunger, 24 Vac, 50 Hz
7	102-3443	1	Solenoid-Low Wattage, W/Surge Protection (Black Wires)
8	606902	1	Handle, Bleed Plug
9	102-4787	1	Bleed Plug
10	835203	1	Cap, Vandal Resistant (Pressure Regulating Models Only)
11	EZR-30	1	Regulator Module, 30 Psi (Includes Item 10) (Pressure Regulating Models Only) ◆
11	EZR-100	1	Regulator Module, 100 Psi (Includes Item 10) (Pressure Regulating Models Only) ◆
12	89-9521	1	Blanking Plug Assy. (Non-Pressure Regulating Models Only)
13	834101	1	Valve Assy., Schrader
14	102-0367	1	Bonnet Assy.
15	1126	1	Washer-Flat
16	1033-H	1	Bushing
17	1041	1	Spring,2X3 Ss
18	934501	1	Diaphragm Assy.
19	102-7879	1	Diaphragm Assy., Scrubber, 2"
20	1054-H	1	O-Ring, Body
21	209506-H	1	Plug, Body, Npt
21	209507	1	Plug, Body, Bsp
22		1	Valve Body Assy. ▲
23	1009701	1	O-Ring, Bleed Plug
24	RS100-238-70N	1	O-Ring, Body Plug
25	89-9562	1	Plunger Assy. (Used In Items 5 And 7)
26	360-0220	1	O-Ring, 0.070" X 0.551" X 0.691", El And Pr (Used In Items 5 And 7)
	102-0848		Assy., Kit, Service, 2" & 3" P-220 (Includes Items 1-3, 12-14 And 17)- ●■
	P220S-KIT-08		Assy., Kit, Service, 2" & 3" P-220 (Includes Items 19 And 20) ●■◆

● SERVICE ITEMS
▲ Not serviced separately
◆ Order Through Finished Goods Distribution System - Minneapolis
■ Not illustrated

P-220, P-220G and Scrubber Series - 3 Inch

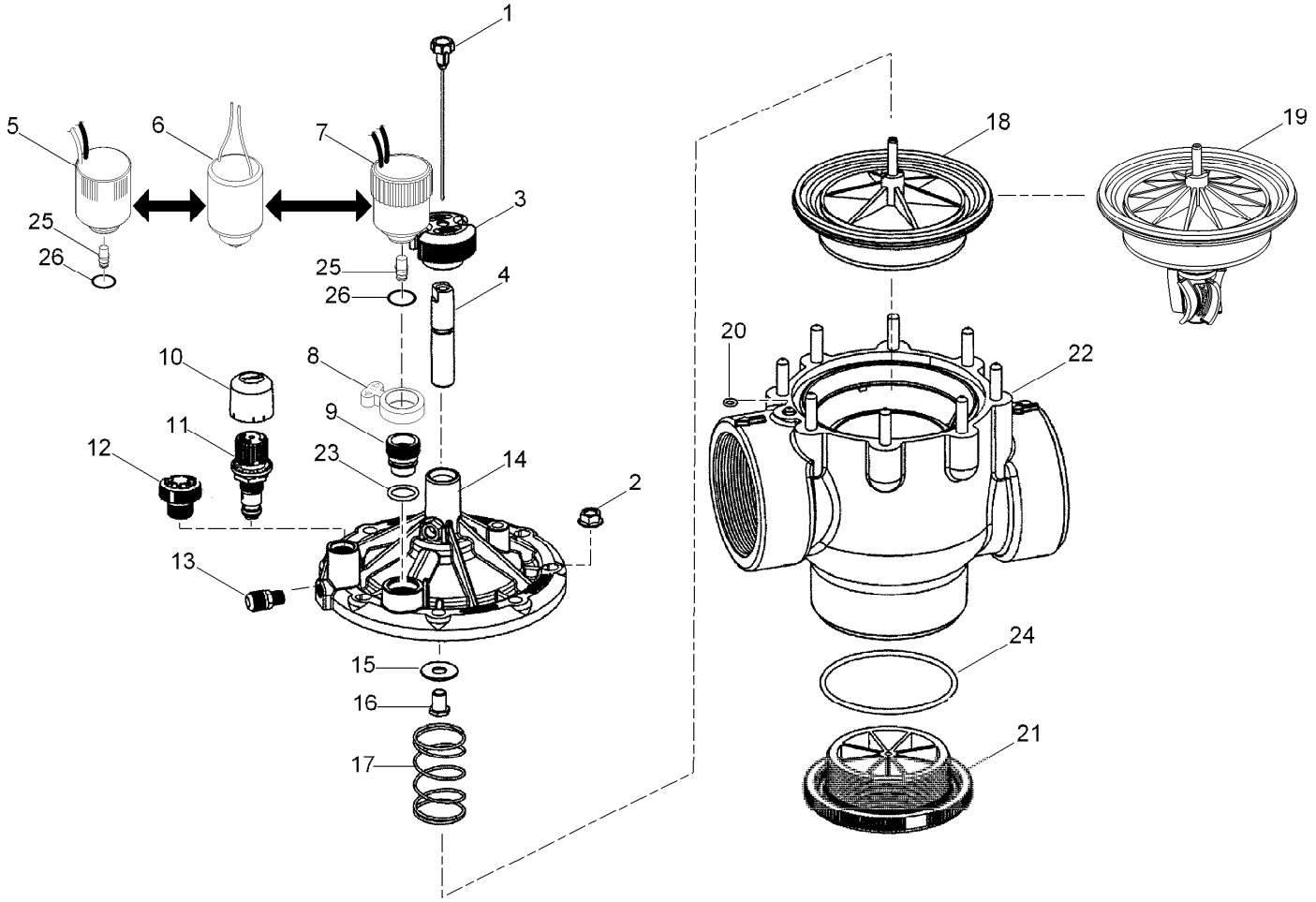

P-220, P-220G and Scrubber Series - 3 Inch (continued)

Ref.	Part Number	Qty.	Description
1	102-0943	1	Metering Rod Assy., P-220
2	118-1722	9	Hex Nut, Flanged
3	89-9780	1	Handle, Flow Control
4	102-0967	1	Stem Assy., Flow Control
5	102-2709	1	Solenoid Assy., 24Vdc, Latching (2-Wire Decoder)
6	118-5982	1	Solenoid Assy. With Plunger, 24 Vac, 60 Hz
6	102-7054	1	Solenoid Assy. With Plunger, 24 Vac, 50 Hz
7	102-3443	1	Solenoid-Low Wattage, W/Surge Protection (Black Wires)
8	606902	1	Handle, Bleed Plug
9	102-4787	1	Bleed Plug
10	835203	1	Cap, Vandal Resistant (Pressure Regulating Models Only)
11	EZR-30	1	Regulator Module, 30 Psi (Includes Item 10) (Pressure Regulating Models Only) ◆
11	EZR-100	1	Regulator Module, 100 Psi (Includes Item 10) (Pressure Regulating Models Only) ◆
12	89-9521	1	Blanking Plug Assy. (Non-Pressure Regulating Models Only)
13	834101	1	Valve Assy., Schrader
14	102-0367	1	Bonnet Assy.
15	1126	1	Washer-Flat
16	1033-H	1	Bushing
17	1041	1	Spring,2X3 Ss
18	935001	1	Diaphragm Assy.
19	102-7880	1	Diaphragm Assy., Scrubber, 3"
20	1054-H	1	O-Ring, Body
21	209605-H	1	Plug, Body, Npt
21	209606-H	1	Plug, Body, Bsp
22		1	Valve Body Assy. ▲
23	1009701	1	O-Ring, Bleed Plug
24	RS100-238-70N	1	O-Ring, Body Plug
25	89-9562	1	Plunger Assy., 24Vdc (Used With Items 5 And 7)
26	360-0220	1	O-Ring (0.070 X 0.551 X 0.691) (As568-015) (Used With Items 5 And 7)
	102-0848		Assy., Kit, Service, 2" & 3" P-220 (Includes Items 1-3, 12-14 And 17)) ●■
	P220S-KIT-00		Diaphragm Kit, Scrubber, 3" (Includes Items 19 And 20) ●■◆

● SERVICE ITEMS
▲ Not serviced separately
◆ Order Through Finished Goods Distribution System - Minneapolis
■ Not illustrated

220, 220G Series, 1 In Valves, Pressure Reg.

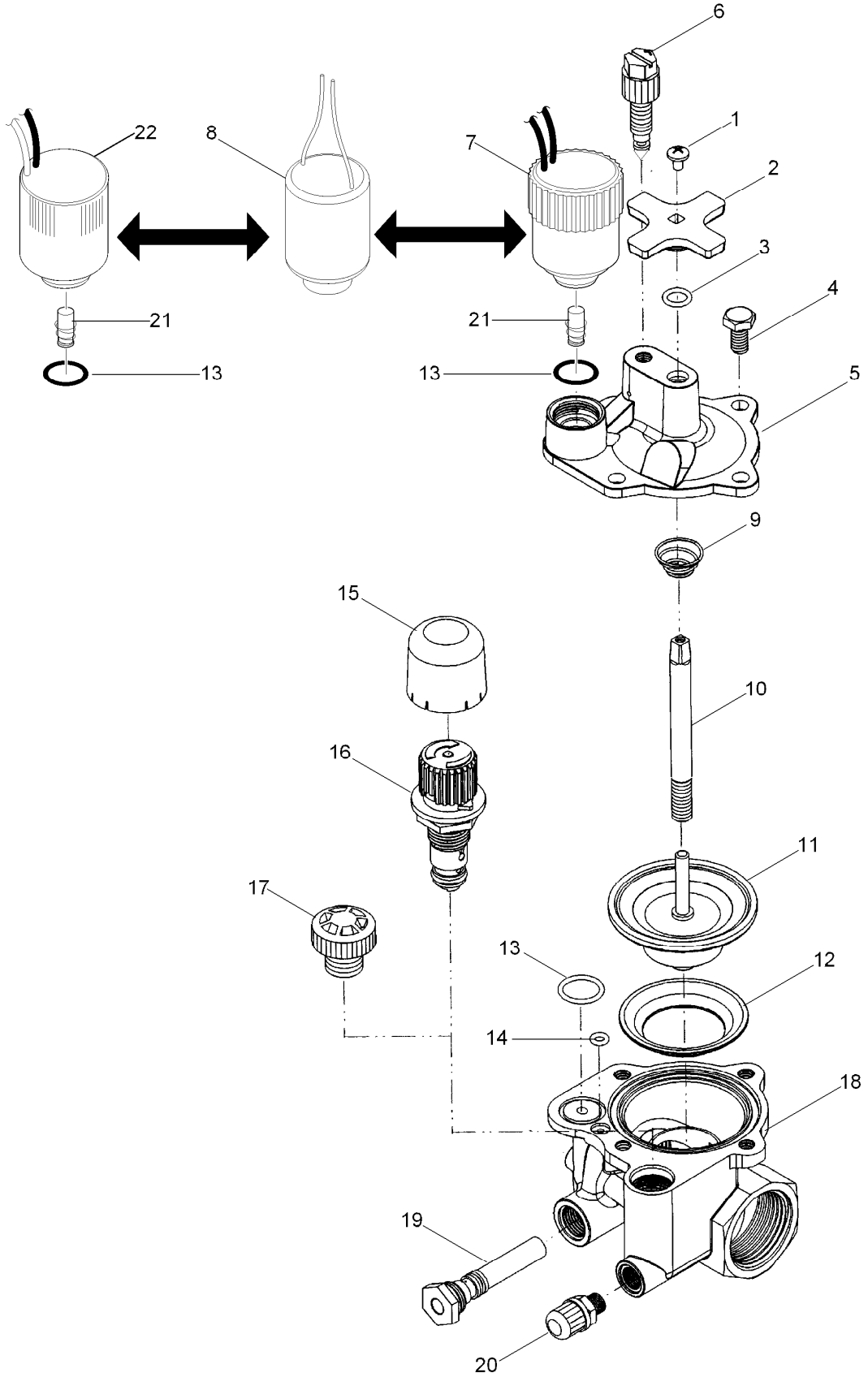

220, 220G Series, 1 In Valves, Pressure Reg. (continued)

Ref.	Part Number	Qty.	Description
1	360-0498	1	Screw, Machine, 8-32 X 1/4"
2	9-4527	1	Handle, Cross
3	360-0107	1	O-Ring (0.070 X 0.301 X 0.441)
4	363-8634	4	Screw-Cap, HH
5	89-9538	1	Cap, Valve
6	102-0208	1	Bleed Screw Assy.
7	102-3443	1	Solenoid-Low Wattage, W/Surge Protection (Black Wires)
8	118-5982	1	Solenoid Assy. With Plunger, 24 Vac, 60 Hz
8	102-7054	1	Solenoid Assy. With Plunger, 24 Vac, 50 Hz
9	9-5146	1	Spring, Diaphragm
10	89-6507	1	Stem Assy., Flow Control, El And Pr (Includes Items 1 And 2)
11	9-5359	1	Diaphragm Assy., 1" Brass
12	35-2639	1	Support, Diaphragm
13	360-0220	2	O-Ring (0.070 X 0.551 X 0.691) (As568-015) (Used With Item 7)
14	360-0530	1	O-Ring, El And Pr (0.070 X 0.145 X 0.285)
15	835203	1	Cap, Vandal Resistant (Pressure Regulating Models Only)
16	EZR-30	1	Regulator Module, 30 Psi (Includes Item 15) ■
16	EZR-100	1	Regulator Module, 100 Psi (Includes Item 15) ■
17	89-9521	1	Blanking Plug Assy. (Non-Pressure Regulating Models Only)
18		1	Body, Brass (Pressure Regulated) ●
19	102-0690	1	Filter Assy., Metering, 1" & 1.5"
20	834101	1	Valve Assy., Schrader
21	89-9562	1	Plunger Assy. (Used With Item 7)
22	102-2709	1	Solenoid Assy., 24Vdc, Latching

● Not serviced separately
■ Order Through Finished Goods Distribution System - Minneapolis

220, 220G Series, 1.25 and 1.5 In, Pressure Reg.

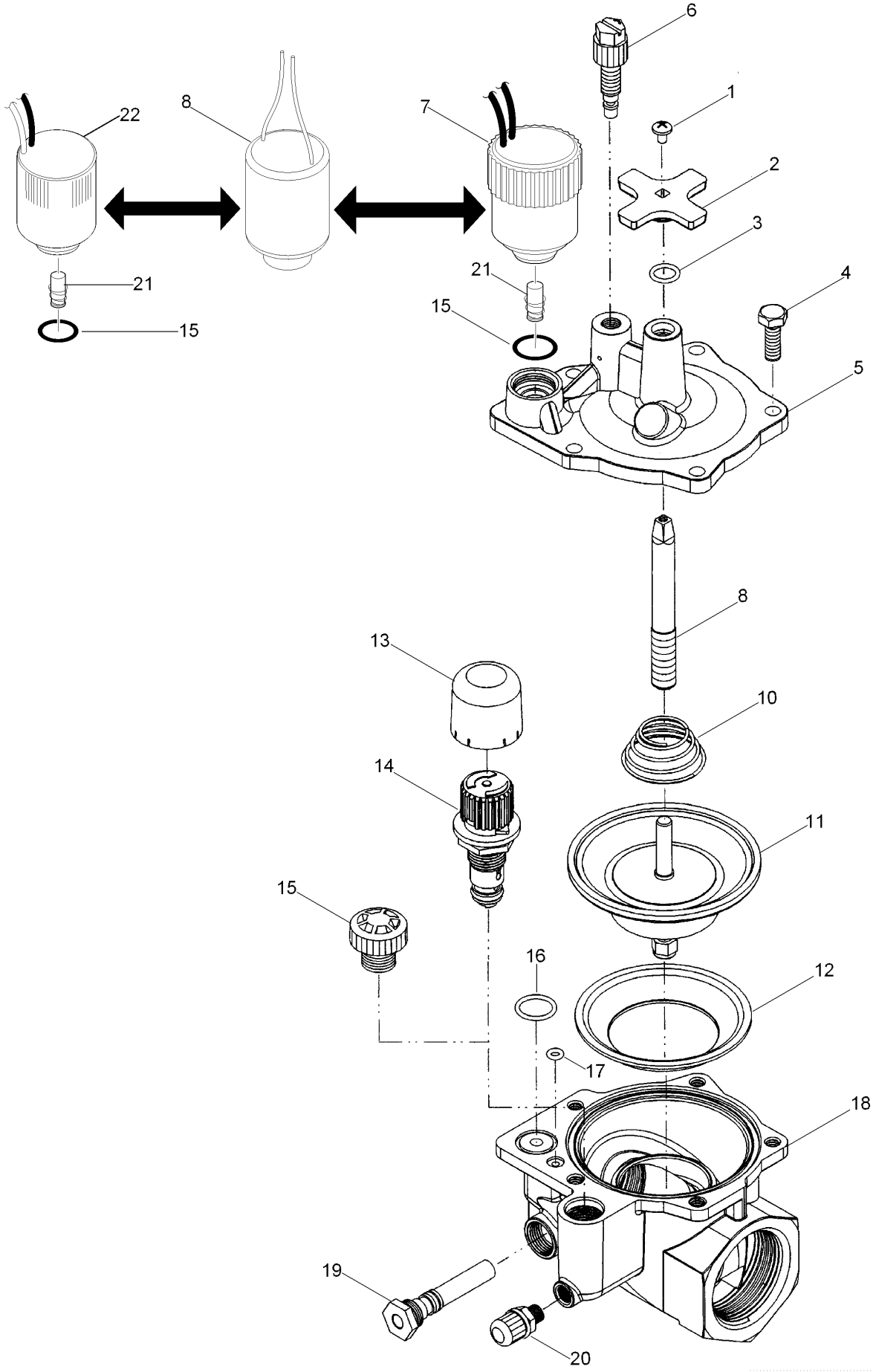

220, 220G Series, 1.25 and 1.5 In, Pressure Reg. (continued)

Ref.	Part Number	Qty.	Description
1	360-0498	1	Screw, Machine, 8-32 X 1/4"
2	9-4527	1	Handle, Cross
3	360-0493	1	O-Ring, 0.070 X 0.364 X 0.504
4	360-0499	5	Screw, Machine, 1/4-20 X 3/4"
5	89-9539	1	Cap, Valve
6	102-0208	1	Bleed Screw Assy.
7	102-3443	1	Solenoid-Low Wattage, W/Surge Protection (Black Wires)
8	118-5982	1	Solenoid Assy. With Plunger, 24 Vac, 60 Hz
8	102-7054	1	Solenoid Assy. With Plunger, 24 Vac, 50 Hz
8	9-4424	1	Stem, Flow Control
10	102-0637	1	Spring, Diaphragm
11	9-5361	1	Diaphragm Assy., 1.5" And 1.25"
12	35-2452	1	Support, Diaphragm
13	835203	1	Cap, Vandal Resistant (Pressure Regulating Models Only)
14	EZR-30	1	Regulator Module, 30 Psi (Used With Item 13) (Pressure Regulating Models Only) ■
14	EZR-100	1	Regulator Module, 100 Psi (Used With Item 13) (Pressure Regulating Models Only) ■
15	89-9521	1	Blanking Plug Assy. (Non-Pressure Regulating Models Only)
16	360-0220	2	O-Ring (0.070 X 0.551 X 0.691) (As568-015) (Used With Item 7)
17	360-0530	1	O-Ring, El And Pr (0.070 X 0.145 X 0.285)
18		1	Body, Brass (Pressure Regulated) ●
19	102-0690	1	Filter Assy., Metering, 1" & 1.5"
20	834101	1	Valve Assy., Schrader
21	89-9562	1	Plunger Assy. (Used With Item 7)
22	102-2709	1	Solenoid Assy., 24Vdc, Latching

● Not serviced separately
■ Order Through Finished Goods Distribution System - Minneapolis

220, 220G Series, 2 Inch, Pressure Reg.

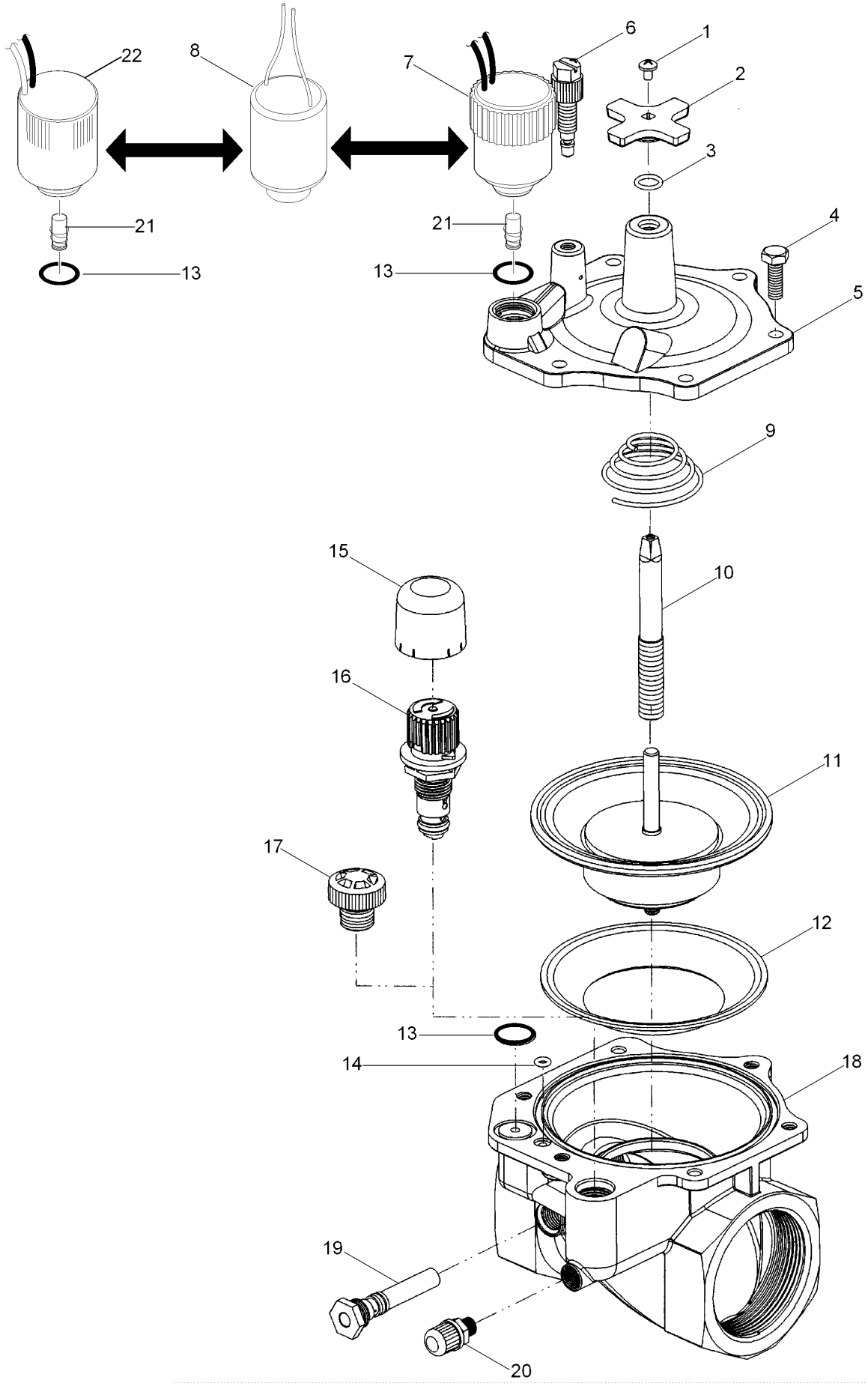

220, 220G Series, 2 Inch, Pressure Reg. (continued)

Ref.	Part Number	Qty.	Description
1	360-0498	1	Screw, Machine, 8-32 X 1/4"
2	9-4527	1	Handle, Cross
3	360-0493	1	O-Ring, 0.070 X 0.364 X 0.504
4	360-0499	6	Screw, Machine, 1/4-20 X 3/4"
5	89-9540	1	Cap, Valve
6	102-0208	1	Bleed Screw Assy.
7	102-3443	1	Solenoid-Low Wattage, W/Surge Protection (Black Wires)
8	118-5982	1	Solenoid Assy. With Plunger, 24 Vac, 60 Hz
8	102-7054	1	Solenoid Assy. With Plunger, 24 Vac, 50 Hz
9	89-1652	1	Spring, Diaphragm
10	9-4543	1	Stem, Flow Control
11	9-5363	1	Diaphragm, Assy., 2"
12	9-4541	1	Support, Diaphragm
13	360-0220	2	O-Ring (0.070 X 0.551 X 0.691) (As568-015) (Used With Item 7)
14	360-0530	1	O-Ring, El And Pr (0.070 X 0.145 X 0.285)
15	835203	1	Cap, Vandal Resistant (Pressure Regulating Models Only)
16	EZR-30	1	Regulator Module, 30 Psi (Includes Item 16) (Pressure Regulating Models Only) ■
16	EZR-100	1	Regulator Module, 100 Psi (Includes Item 16) (Pressure Regulating Models Only) ■
17	89-9521	1	Blanking Plug Assy. (Non-Pressure Regulating Models Only)
18		1	Body, Brass ●
19	102-0691	1	Filter Assy., Metering, 2"
20	834101	1	Valve Assy., Schrader (Pressure Regulating Models Only)
21	89-9562	1	Plunger Assy. (Used With Item 7)
22	102-2709	1	Solenoid Assy., 24Vdc, Latching

● Not serviced separately
■ Order Through Finished Goods Distribution System - Minneapolis

220 Series, 2.5 and 3 Inch

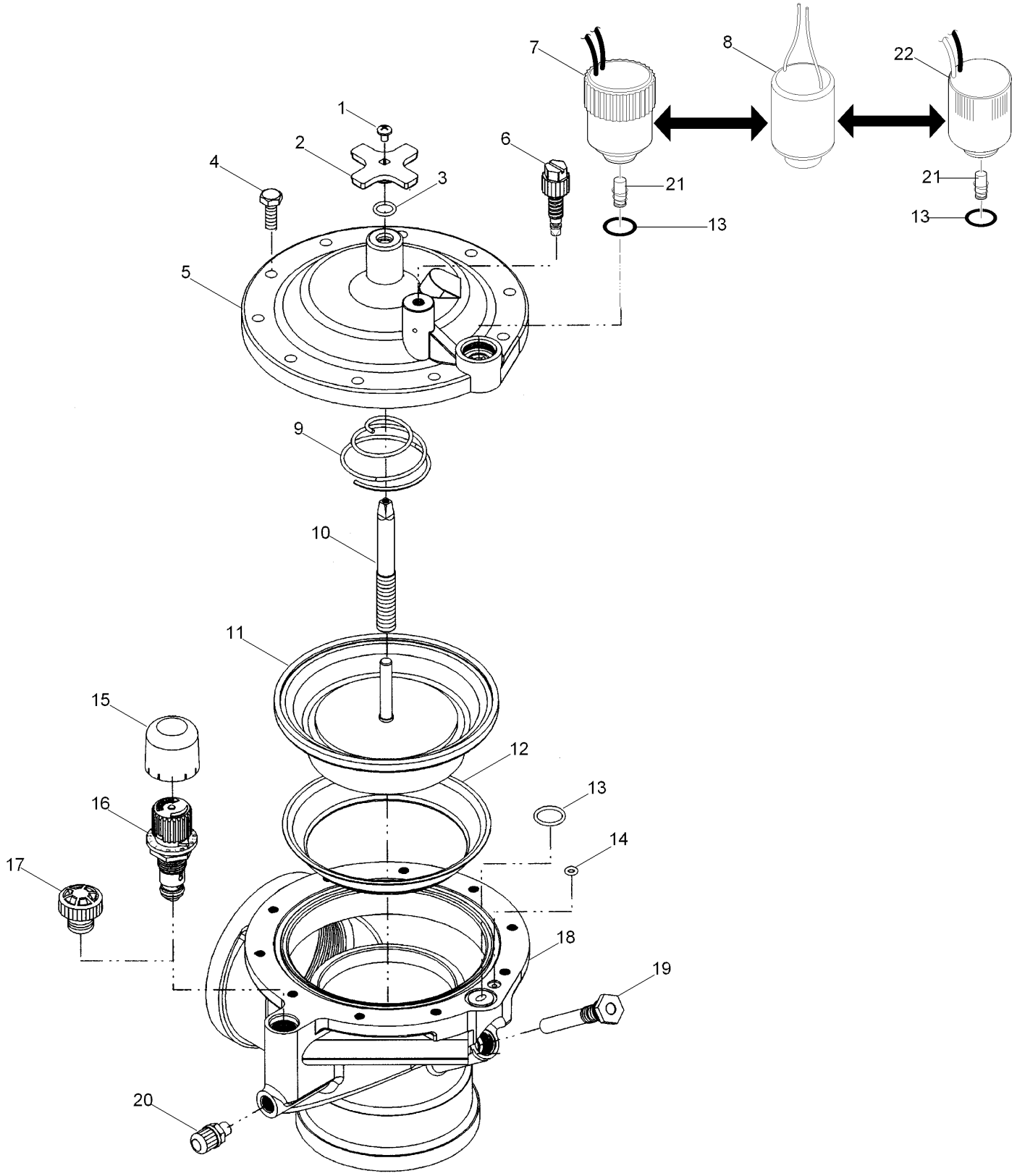

220 Series, 2.5 and 3 Inch (continued)

Ref.	Part Number	Qty.	Description
1	360-0498	1	Screw, Machine, 8-32 X 1/4"
2	9-4527	1	Handle, Cross
3	360-0493	1	O-Ring, 0.070 X 0.364 X 0.504
4	360-0499	10	Screw, Machine, 1/4-20 X 3/4"
5	89-9541	1	Cap, Valve
6	102-0208	1	Bleed Screw Assy.
7	102-3443	1	Solenoid-Low Wattage, W/Surge Protection (Black Wires)
8	118-5982	1	Solenoid Assy. With Plunger, 24 Vac, 60 Hz
8	102-7054	1	Solenoid Assy. With Plunger, 24 Vac, 50 Hz
9	89-1744	1	Spring, Diaphragm
10	9-4543	1	Stem, Flow Control
11	89-6421	1	Diaphragm Assy.
12	89-8126	1	Support, Diaphragm
13	360-0220	2	O-Ring (0.070 X 0.551 X 0.691) (As568-015) (Used With Item 7)
14	360-0530	1	O-Ring, El And Pr (0.070 X 0.145 X 0.285)
15	835203	1	Cap, Vandal Resistant (Pressure Regulating Models Only)
16	EZR-30	1	Regulator Module, 30 Psi (Includes Item 15) (Pressure Regulating Models Only) ■
16	EZR-100	1	Regulator Module, 100 Psi (Includes Item 15) (Pressure Regulating Models Only) ■
17	89-9521	1	Blanking Plug Assy. (Non-Pressure Regulating Models Only)
18		1	Body, Brass ●
19	102-0692	1	Filter Assy., Metering
20	834101	1	Valve Assy., Schrader
21	89-9562	1	Plunger Assy. (Used With Item 7)
22	102-2709	1	Solenoid Assy., 24Vdc, Latching

● Not serviced separately
■ Order Through Finished Goods Distribution System - Minneapolis

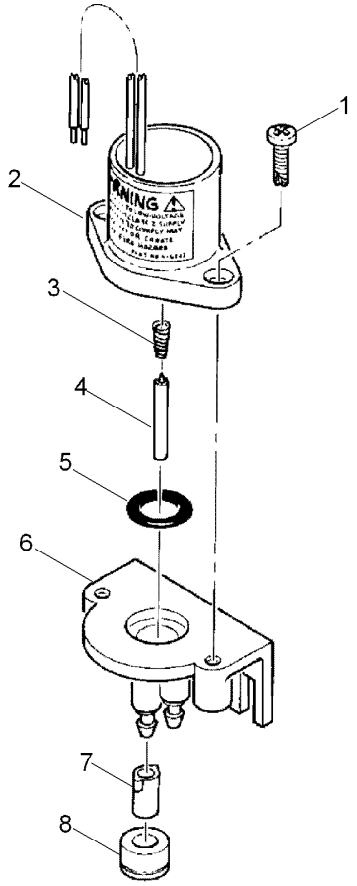

2-Way Pilot Valve

Ref.	Part Number	Qty.	Description
1	360-0715	2	Screw, Tap, #10
2	89-0878	1	Solenoid And Plunger Assy., El (Includes Items 2-4)
3	9-6148	1	Spring-Plunger, Solenoid, El
4	9-6527	1	Plunger Assy., El
5	2-9652	1	O-Ring, 7/16" X 5/8", No (As568-111)
6	9-8280	1	Body Assy., Valve
7	89-8157	2	Cap, 1/4", Poly, No
8	900-40	2	Retainer, Tube, Pr And Cr ●

● Order Through Finished Goods Distribution System - Minneapolis

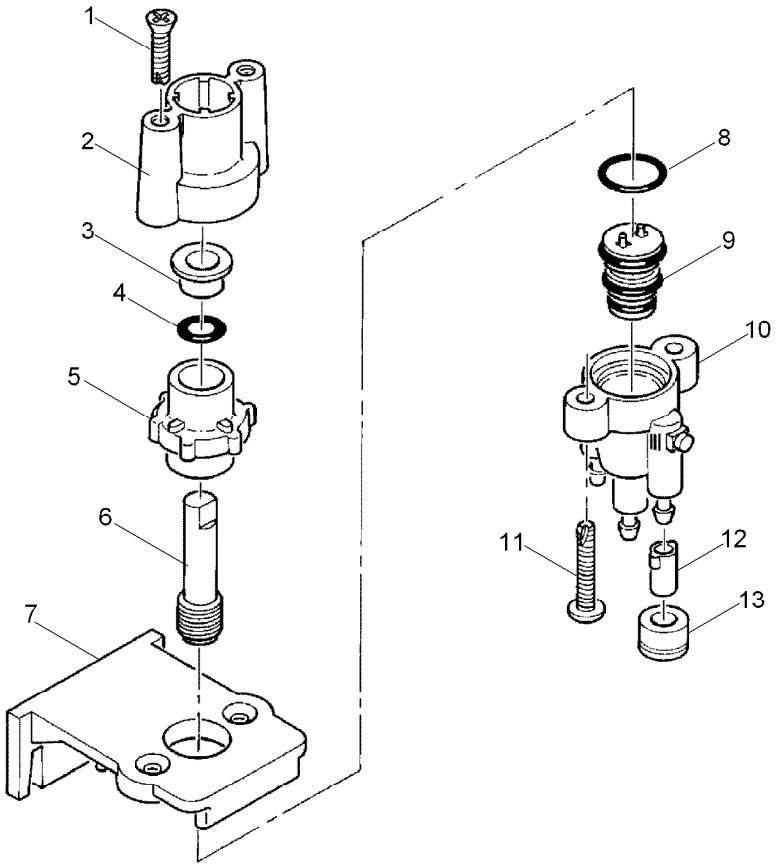

Manual Valve Actuator

Ref.	Part Number	Qty.	Description
1		2	Screw, Tap, #8 ●
2		1	Adapter (Includes Item 3) ●
3		1	Retainer, O-Ring ●
4	2-9652	1	O-Ring, 7/16" X 5/8", No (As568-111)
5		1	Cap ●
6		1	Stem, Control ●
7		1	Bracket, Mounting ●
8	360-0220	1	O-Ring (0.070 X 0.551 X 0.691) (As568-015)
9	102-5599	1	Actuator Assy. (Includes O-Rings)
10	35-0992	1	Body Assy., Pilot Valve
11		2	Screw, Tap, #8 ●
12	89-8157	3	Cap, 1/4", Poly, No
13	900-40	3	Retainer, Tube, Pr And Cr ■

● Not serviced separately
■ Order Through Finished Goods Distribution System - Minneapolis

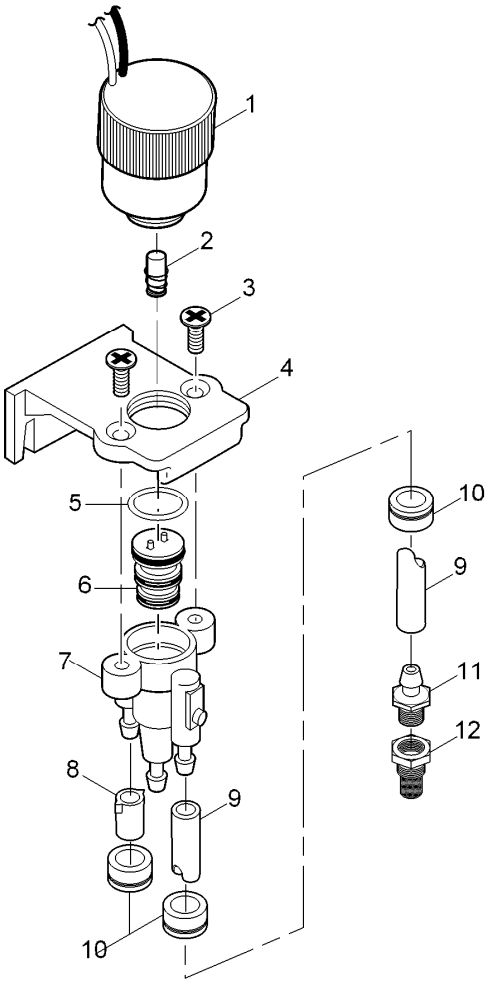

3-Way Actuator

Ref.	Part Number	Qty.	Description
1	89-1673	1	Solenoid ASM
2	118-0262	1	Plunger Assy. With Spring, El
3		2	Screw, Machine, 10-24 X 1/2" ▲
4		1	Bracket, Mounting ▲
5	360-0220	1	O-Ring (0.070 X 0.551 X 0.691) (As568-015)
6	102-5599	1	Actuator Assy. (Includes O-Rings)
7	35-0992	1	Body Assy., Pilot Valve (Used With 286-66-01)
8	89-8157	1	Cap, 1/4", Poly, No (Used With 286-66-01)
9		1	Tube, 1/4" X 36" (Used With 286-66-01) ▲
10	900-40	3	Retainer, Tube, Pr And Cr (Used With 286-66-01) ◆
11	89-8157	1	Cap, 1/4", Poly, No (Used With 286-66-01)
12	995-14	1	Fitting, Screen (Used With 286-66-01)
	35-4603		Kit, Service Assy. (Includes Items 3-7) (Used With 286-66-01) ●■
	35-4602		Kit, Service Assy. (Includes Items 3-7) (Use With 9-8482) ●■

● SERVICE ITEMS
▲ Not serviced separately
◆ Order Through Finished Goods Distribution System - Minneapolis
■ Not illustrated

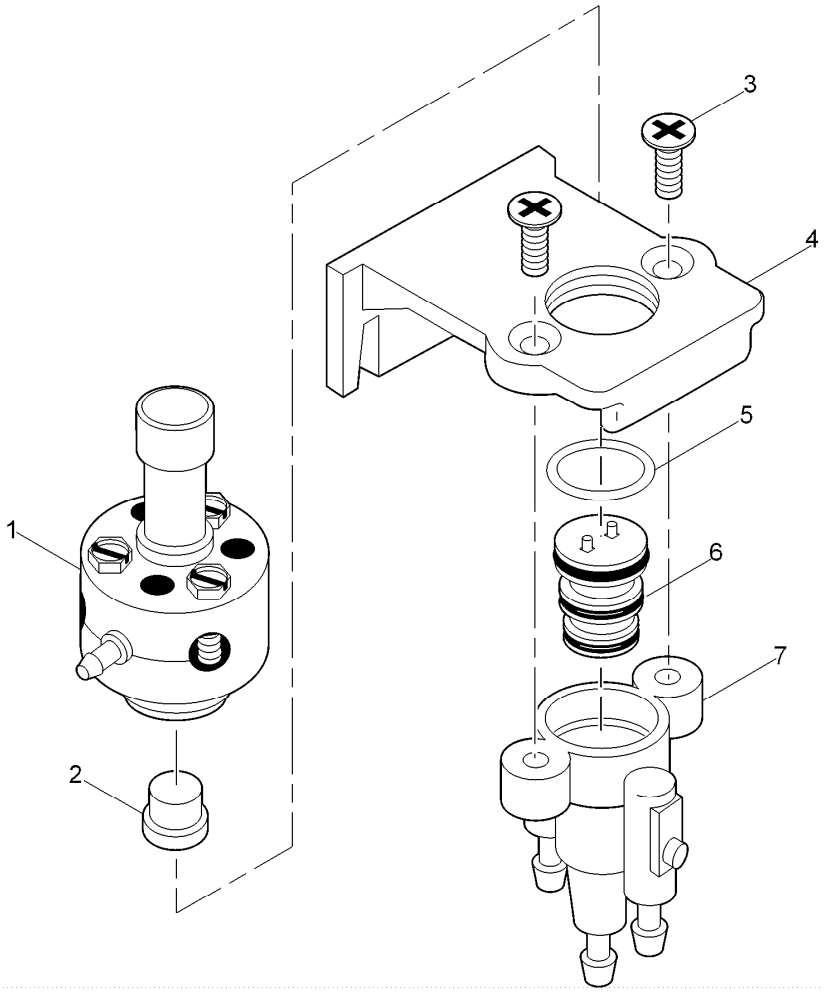

3-Way Actuator, (NC)

Ref.	Part Number	Qty.	Description
1	89-6005		Adapter-Pilot Valve, Nc
2			Shuttle ▲
3			Screw, Machine, 10-24 X 1/2" ▲
4			Bracket, Mounting ▲
5	360-0220		O-Ring (0.070 X 0.551 X 0.691) (As568-015)
6	102-5599		Actuator Assy. (Includes O-Rings)
7		1	Body Assy., Pilot Valve ▲
	35-4603		Kit, Service Assy. (Includes Items 3-7) ●■

● SERVICE ITEMS
▲ Not serviced separately
■ Not illustrated

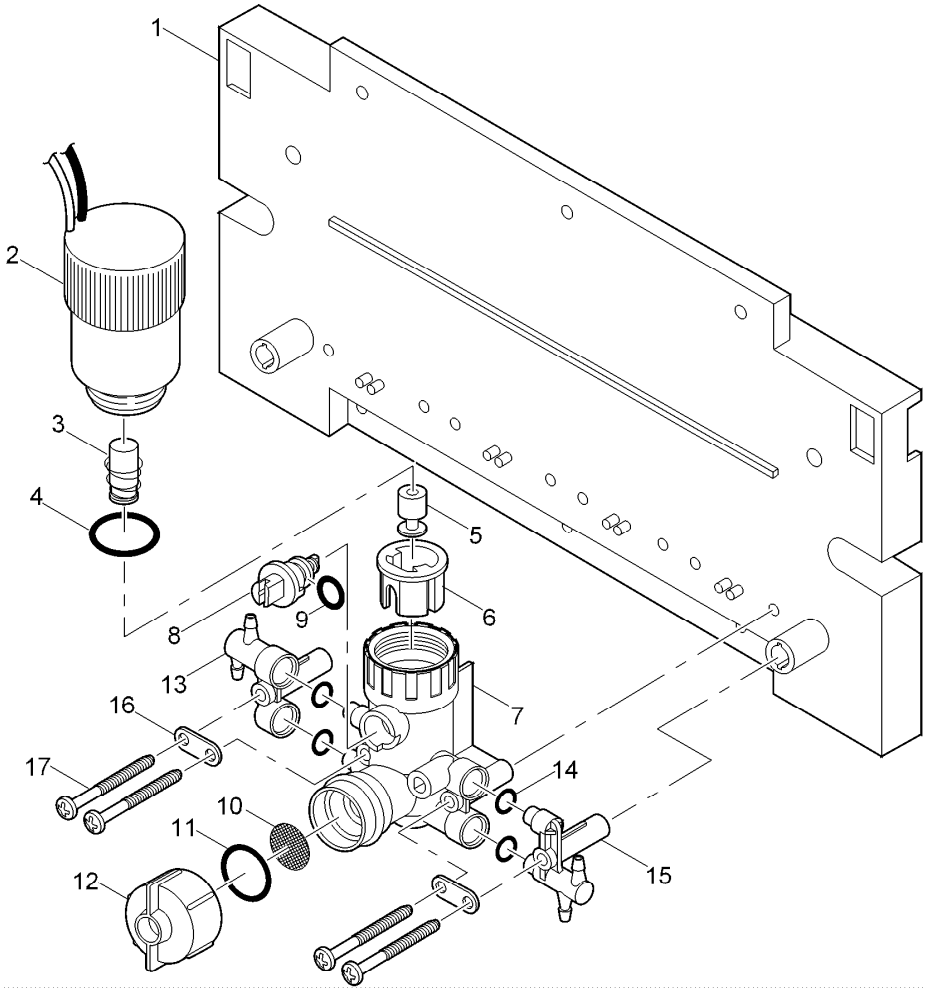

Electric-Hydraulic Converter Module Assembly

Ref.	Part Number	Qty.	Description
1	89-1662	1	Baseplate
2	89-5985	4	Solenoid Assy.
3	118-0262	4	Plunger Assy. With Spring, El
4	360-0220	4	O-Ring (0.070 X 0.551 X 0.691) (As568-015)
5	102-5359	4	Plunger, Shuttle
6	102-5360	4	Sleeve
7	89-8203	4	Body Assy., No With White Pins On Actuator
7	89-8204	4	Body Assy., Nc With Black Pins On Actuator
8	102-4636	4	Stem, Manual, No (White)
8	102-4637	4	Stem, Manual, Nc (Black)
9	360-0497	4	O-Ring
10	89-0371	4	Screen, Filter
11	360-0402	4	O-Ring
12	102-4638	4	Cap, Filter
12	89-8205	4	Cap Assy., Blind
13	102-4641	1	Tee, Female
14	2-9654	10	O-Ring
15	102-4642	1	Tee, Male
16	89-1675	2	Strap, Tie
17	363-3158	7	Screw, #6 X 1.25"

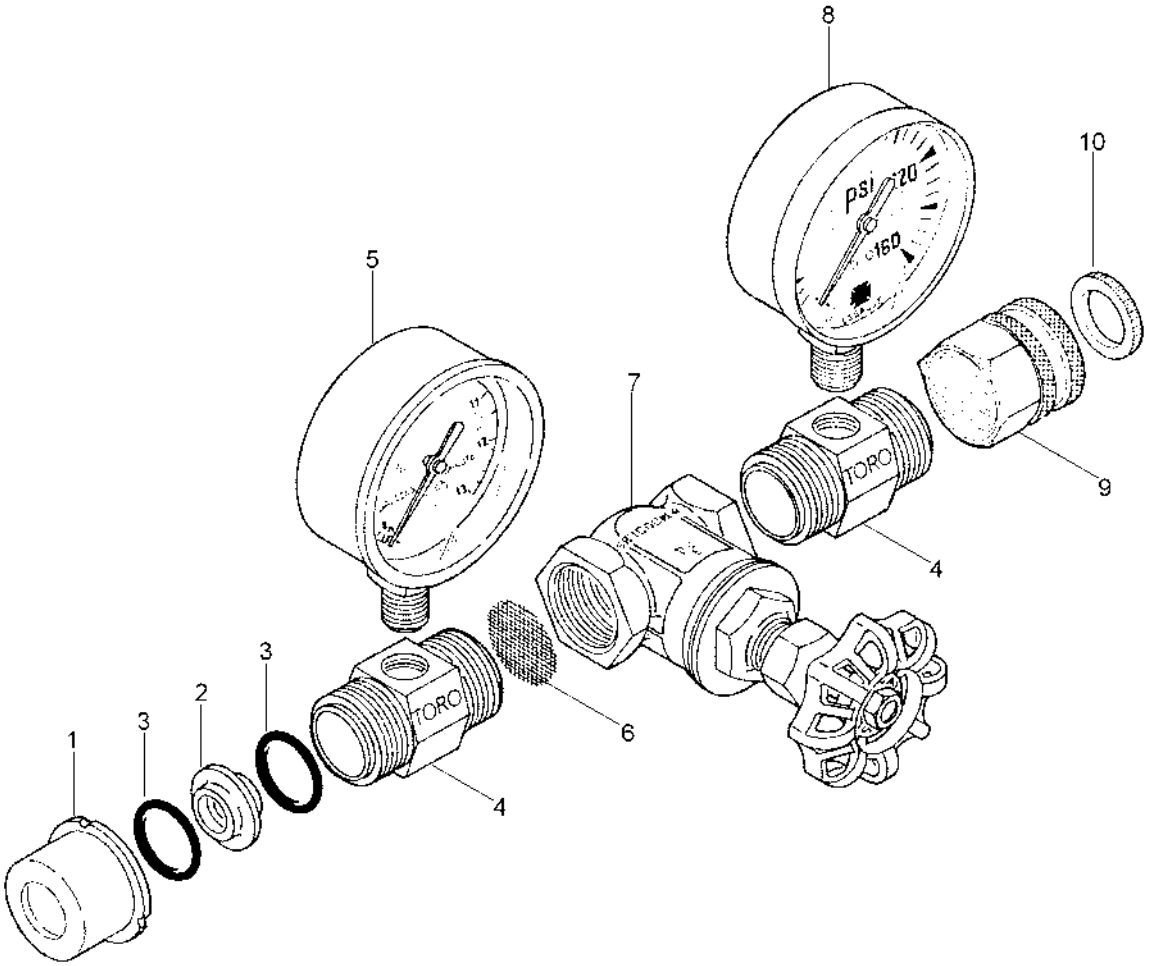

Flow Gauge, 995-01

Ref.	*Part Number*	*Qty.*	*Description*
1	9-4576	1	Threaded Insert, 3/4"
2	5-311	1	Orifice Plate
3	360-0596	2	O-Ring
4	9-6023	2	Nipple
5	5-309	1	Flow Gauge
6	5-307	1	Filter Screen
7		1	Gate Valve, 3/4" ●
8	5-308	1	Pressure Gauge
9	5-303	1	Hose To Pipe Fitting
10		1	Hose Washer, 3/4" ●

● Not serviced separately

SitePro Field Interface Unit (FIU)

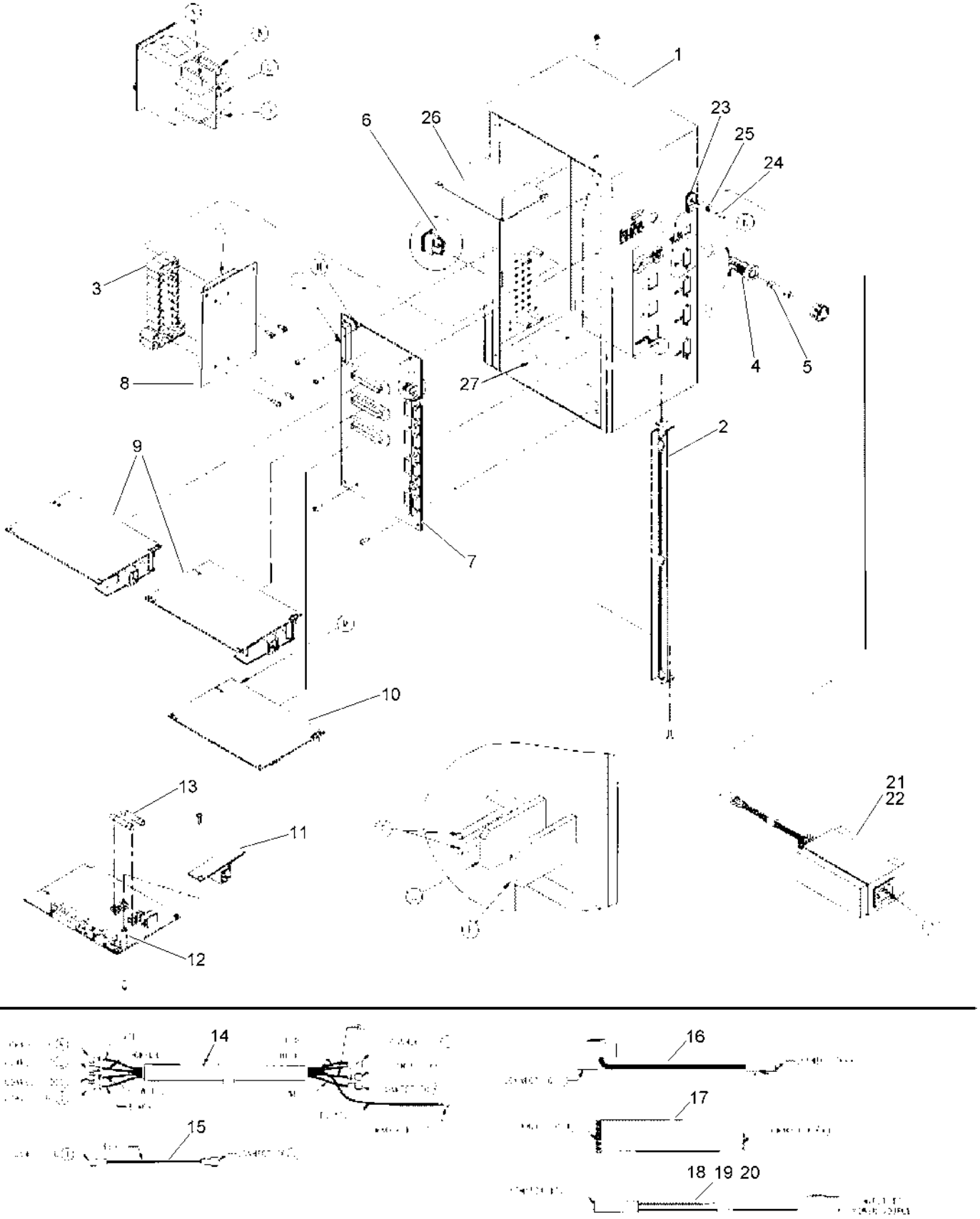

SitePro Field Interface Unit (FIU) (continued)

Ref.	Part Number	Qty.	Description
1		1	Housing, Sncx, Fiu ▲
2	102-0867	1	Fiu Bracket ●
3	102-0872	1	Front Plate, Led Display ●
4	360-0750	1	Holder, Fuse
5	360-0749	1	Fuse, 1.5 Amp (10-Pack)
6	102-0873	1	Rocker Switch, Power ●
7		1	Pcb Assy., Serial, Back Plane (See Service Items 102-0869 Through 102-0871) ▲
8	102-0872	1	Pcb Assy., Led ●
9	102-0864	2	Pcb Assembly, Standard Modem (Includes Items 11, 12 & 13) ●
10	102-0866	1	Universal Modem (Includes Item 16) ●
11		2	Phone Jack Adapter, Standard Modem (See Item 9) ▲
12		2	Spacer, #6-32 X 15/16" (See Item 9) ▲
13	102-3819	4	Fuse, 0.75 Amp (10-Pack) ●
14	102-0875	1	Cable, Fiu Power Switch ●
15	102-0874	1	Wire Assy., Black ●
16		1	Cable Assy., Universal Modem (See Item 10) ▲
17	102-0876	1	Cable Assy., 30-Pin Female Connectors ●
18	102-0877	1	Power Cord, U.S./Canada ●
19	102-0879	1	Power Cord, Europe ●
20	102-0881	1	Power Cord, English ●
21	102-0878	1	Transformer, 12V D.C., 1.5A ●
22	102-0882	1	Transformer, Australian, 12V D.C., 1.5A ●
23	1-7204	1	Clamp, Electric
24	4-1063	1	Screw, Tap, #6
25	1-3086	1	Washer, Flat, #6, Brass
26	2011R	1	Communication Radio Assembly, 1-Wireline
26	2012R	1	Communication Radio Assembly, 2-Wireline
27	102-3125		Radio Adaptor Board
	102-1201		Kit, Service, Cable, Sitepro, Fiu (9-Pin Male To 25-Pin Female Serial Cable) ●■
	102-3819		Fuse, 3/4 Amp (Includes Item 13) (10-Pack) ●■
	102-0868		1.5 Amp Fuse Assy. (Includes 1 Each Of Items 4 & 5) ●■
	102-0869		Pcb Assy. (Fiu-2010), Serial Back Plane (Includes Item 7) ●■
	102-0870		Pcb Assy. (Fiu-2020 And Fiu-2011), Serial Back Plane (Includes Item 7) ●■
	102-0871		Pcb Assy. (Fiu-2021), Serial Back Plane (Includes Item 7) ●■
	102-0397		Fiu Sensor Kit ●◆■
	102-0767		Fiu Additional Surge Protection Kit ●◆■
	89-9116		Fiu Wireline Path Upgrade Kit ●◆■
	89-9117		Fiu Radio-Link Accessory Kit ●◆■

● SERVICE ITEMS
▲ Not serviced separately
◆ Order Through Finished Goods Distribution System - Minneapolis
■ Not illustrated

TouchNet For OSMAC

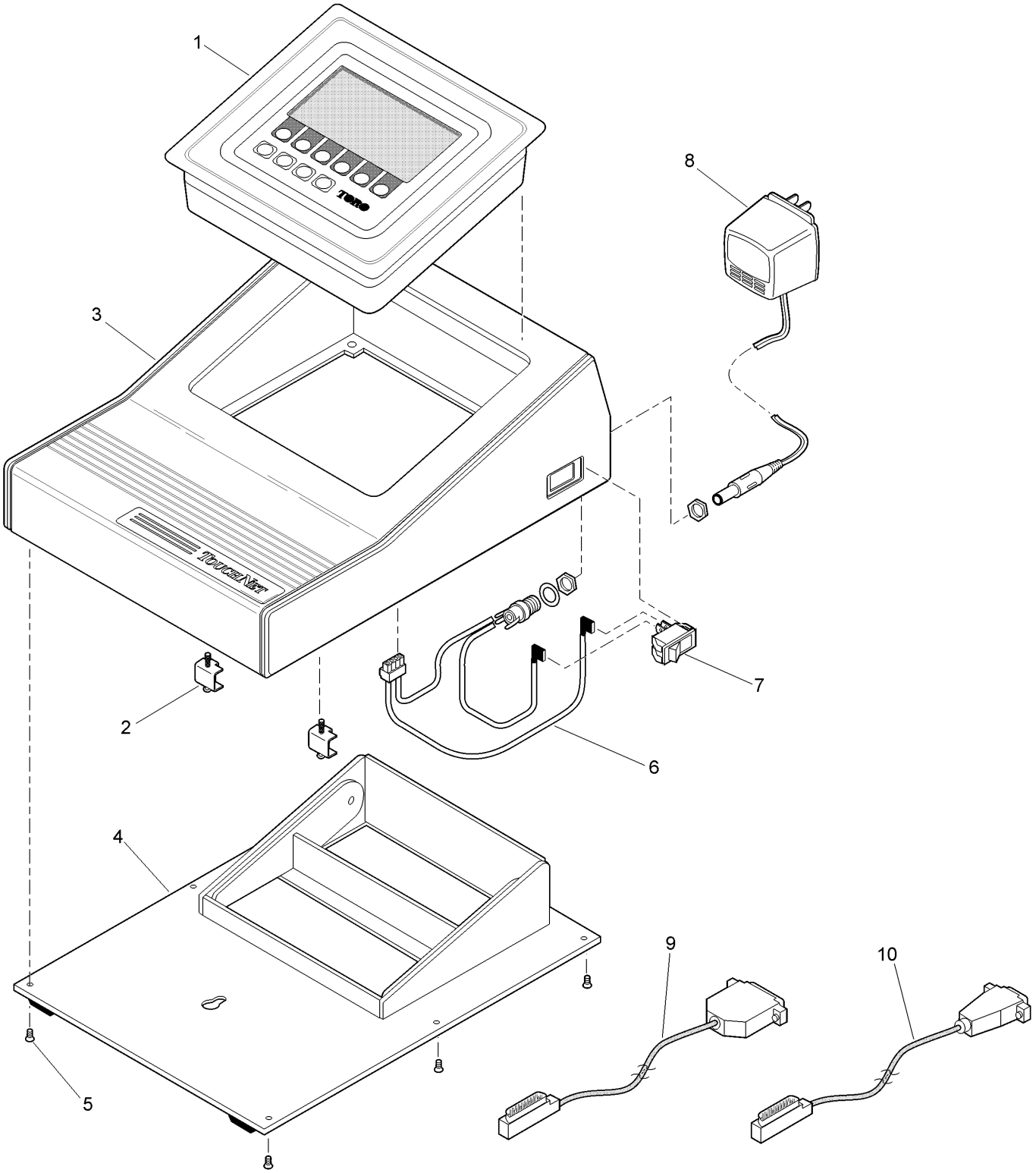

TouchNet For OSMAC (continued)

Ref.	Part Number	Qty.	Description
1	89-8260	1	Data Panel, Touch Net ●
2	363-3549	6	Clamp
3	89-8357	1	Housing Assembly (Includes Item 3-5)
4		1	Base, Housing ■
5		6	Screw, Housing Base ■
6	89-8257	1	Wiring Harness Assembly
7	363-3531	1	Switch, Rocker
8	363-3535	1	Transformer Assembly, 120 V A.C., 60 Hz

Ref.	Part Number	Qty.	Description
9	363-3537	1	Connection Cable Assembly (Use With Motorola People Finder)
9	89-9065	1	Connection Cable Assembly (Use With Handheld Remote Interface)
10	102-0573	1	Connection Cable Assembly (Use With Toro Wide Or Narrow Band Base Station)

● Available from NSN

■ Not serviced separately

Touch Net For Network LTC Plus Satellite

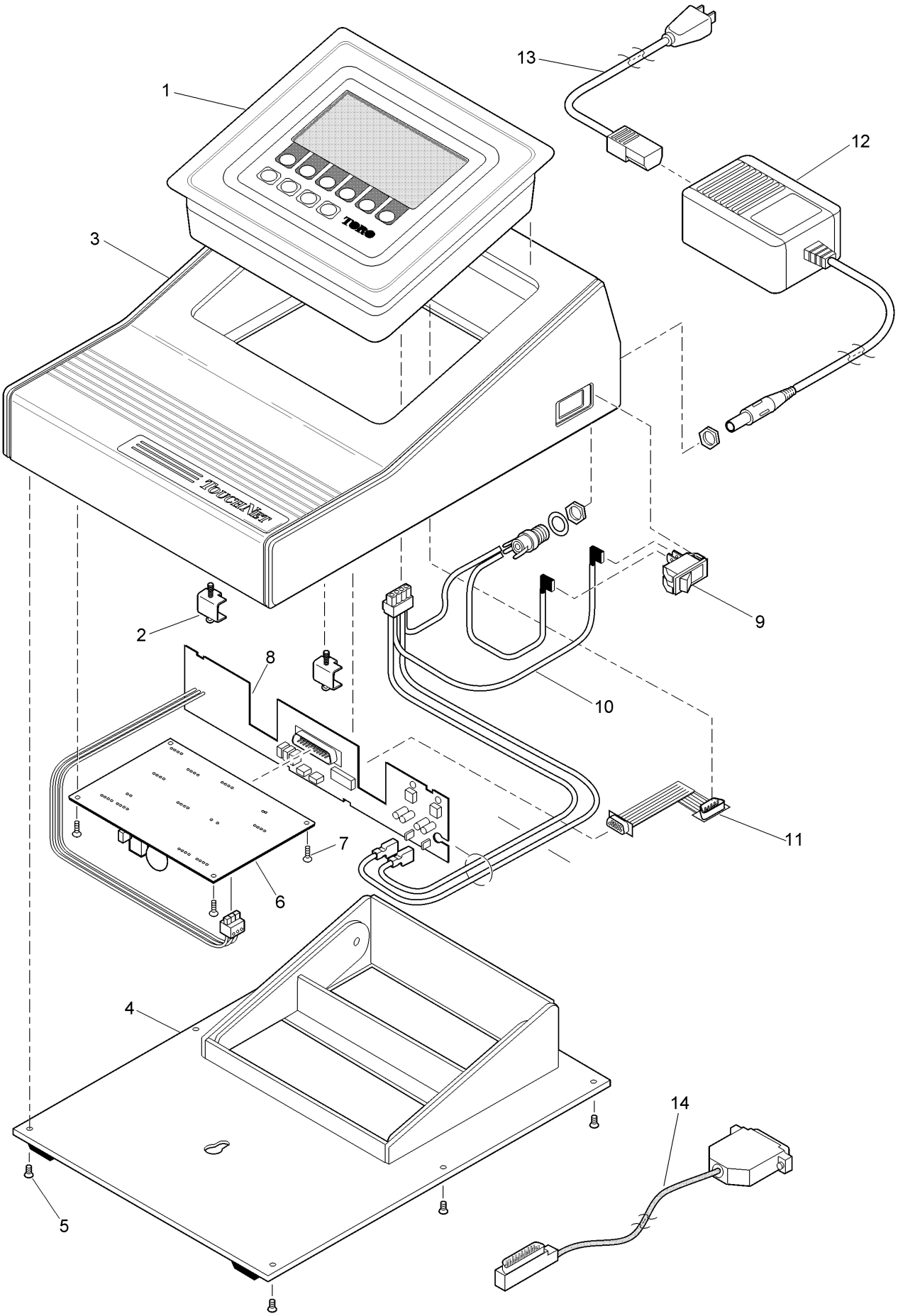

Touch Net For Network LTC Plus Satellite (continued)

Ref.	Part Number	Qty.	Description
1	89-8791	1	Data Panel, Touch Net ●
2	363-3549	6	Clamp
3	89-8357	1	Housing Assembly (Includes Items 4 & 5)
4		1	Base, Housing ■
5		6	Screw, Mach, 4-40, Flt, Csk ■
6	102-0864	1	Pcb Assembly, Standard Modem
7	363-1355	4	Screw, Tap, #6
8		1	Pcb Assy., Dtp-To-Modem ■
9	363-3531	1	Switch, Rocker
10		1	Wire Harness Assy. ■
11	89-8534	1	Ribbon Cable Assy., Interface
12	102-0878	1	Transformer, 12V D.C., 1.5 Amp
13	102-0877	1	Power Cord, U.S./Canada
14	89-9065	1	Connection Cable Assembly (Use With Handheld Remote Interface)

● Available from NSN

■ Not serviced separately

GDC - Stand-Alone, PC Models, 2-Wire Decoder Sys

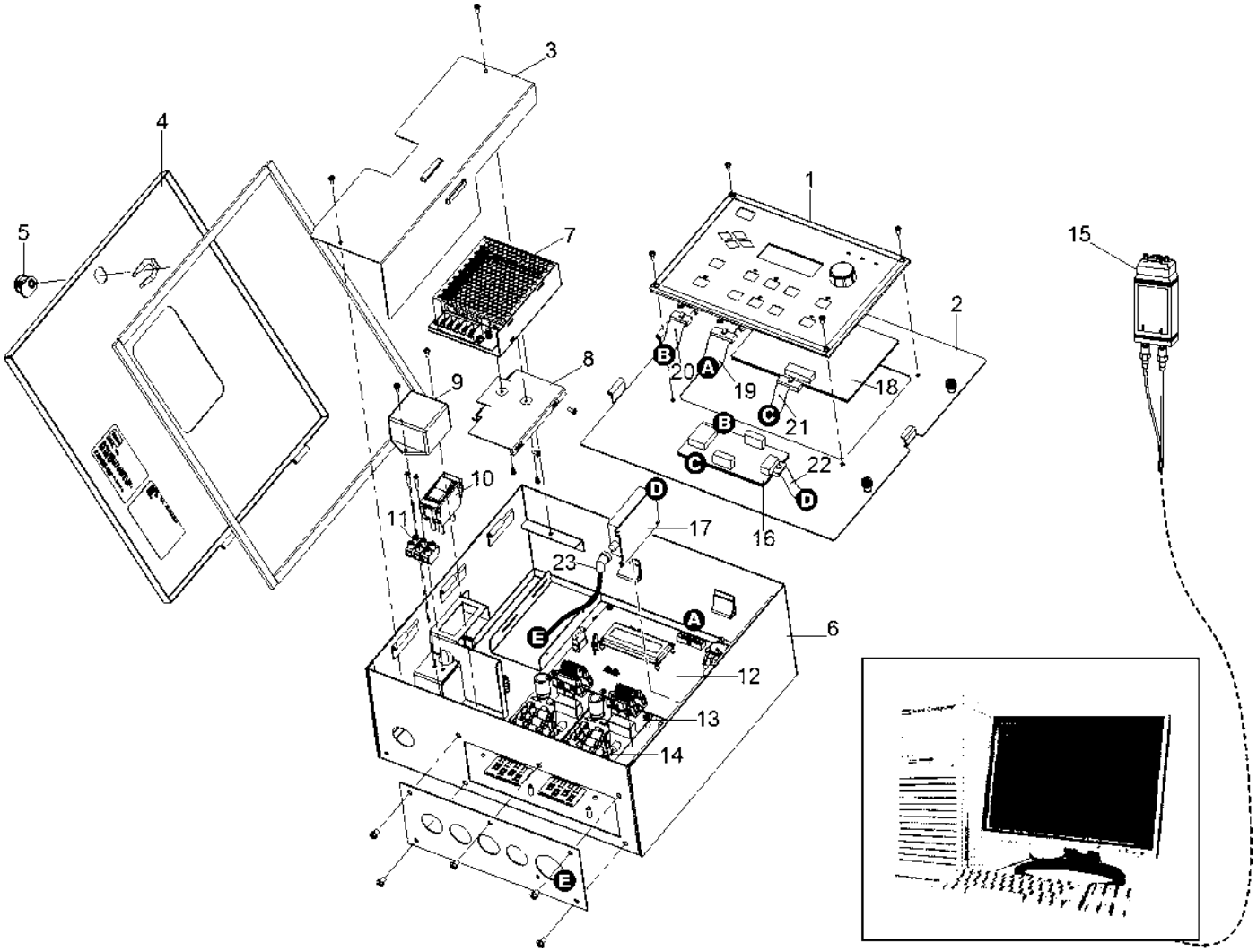

GDC - Stand-Alone, PC Models, 2-Wire Decoder Sys (continued)

Ref.	Part Number	Qty.	Description
1	102-5918SK	1	Timing Mechanism Assy., Gateway (Stand-Alone)
1	118-3735SK	1	Timing Mechanism Assy., Gateway (Remote)
2	102-5049	1	Panel, Gateway, Decoder (Stand-Alone Models Only)
3	118-0496	1	Power Supply Cover, Gateway, Decoder
4	102-5048SK	1	Door, Gateway Decoder
5	363-3785	1	Lock Assy. W/Keys
6	118-0880	1	Cabinet, Gateway Decoder
7	118-0540	1	Power Supply, Ac/Dc, Gateway, Decoder
8	118-0475	1	Power Supply Bracket, Upper
9	102-9741	1	Ttf, Filter Assembly
10	363-3361	1	Switch, Circuit Breaker, 1.5A
11	102-4766SK	1	Wire Harness, Terminal Block To Switch
12	118-2750SK	1	Motherboard Assembly With Tricomm, Gateway Decoder
13	118-2749SK	1	Pcb Assy., Gateway Daughterboard
14	363-8506	8	Fuse, 5 X 20Mm, Fast, 3.15A, 250V
15	102-6461	1	Fiber Optic Converter Kit, Gateway To Central Computer
16	118-3101SK	1	Digital Radio Interface Board, Gateway
17	118-3442SK	1	Digital Radio
18	89-9026	1	Standard Modem, Svc.
19	102-9176	1	Cable, 40-Pos (A To A)
20	118-3329	1	Cable, Int Bd To Tm (B To B)
21	118-3330	1	Cable, Int Bd To Modem (C To C)
22	118-3103	1	Harness, Db9 (D To D)
23	118-3104	1	Cable, Bnc To Bnc, Radio (E To E)

Network VP and VPE - Plastic Cabinet

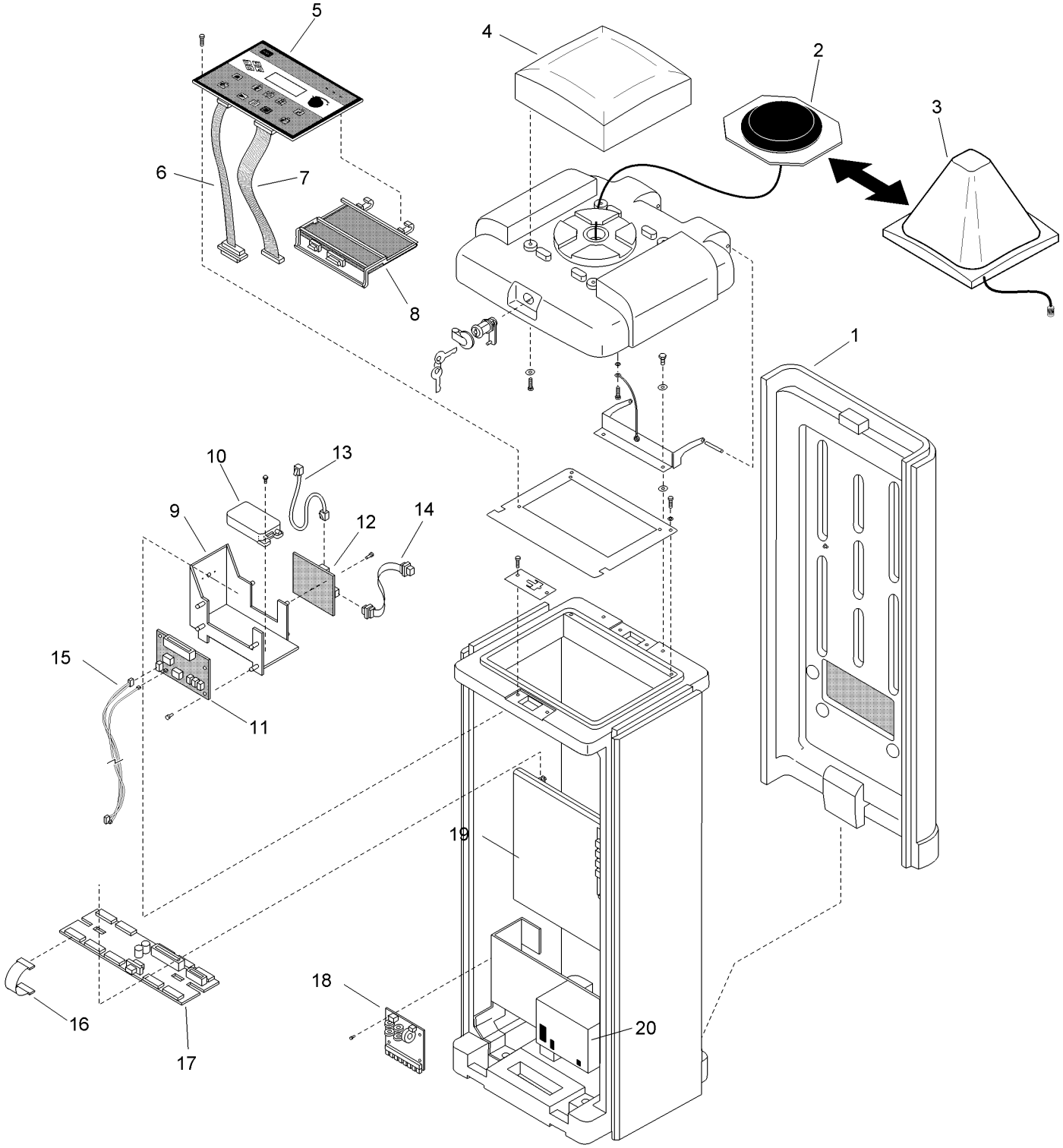

Network VP and VPE - Plastic Cabinet (continued)

Ref.	Part Number	Qty.	Description
1		1	Satellite Plastic Pedestal & Components (See Plastic Cabinet Components Section) ◆
2		1	Antenna Assy., Plastic Pedestal (See Service Item 102-6808) ◆
3		1	Dome Antenna Assy., Plastic Pedestal ◆
4		1	Cover, Satellite Lid (See Plastic Cabinet Components Section) ◆
5	102-3497SK	1	Timing Mechanism (Tm), Vp Satellite
5	102-9738SK	1	Timing Mechanism, Vpe Satellite
6	102-4573SK	1	Cable Assy., Tm To Modem
7	102-3030SK	1	Cable Assy., Tm To Distribution, 12"
8	89-9026	1	Standard Modem, Svc.
9		1	Bracket, Radio Assy. ◆▲
10	363-4638SK	1	Maxon Radio ▲
11	89-7701	1	Modem Assy., Universal, Service ❍▲
12	102-3125SK	1	Radio Interface Board ❍▲
13	363-3619SK	1	Rj-45 Cable Assy. ❍▲
14	102-3257SK	1	Db-9 Cable Assy. ❍▲
15			Cable Assy., Modem To Surge Board ◆▲
16	102-0670		Ribbon Cable, Distribution To Output, 4" Length ❑
17	102-2782SK	1	Distribution Board
17	102-9124SK	1	Ltc+ To Vp Conversion Kit
18	102-8086SK	1	Pcb Assy. Surge Board ❑
19			Vp And Vpe Internal Components (See Vp And Vpe Internal Components Section) ◆
20		1	Power Supply Assy. (See Power Supply Assy. Section) ◆
	363-4185SK		Battery, Vp Back-Up, Service ●■
	89-9044		Cable Assy. Svc., Surge To Modem & Surge To Terminal Block ●■
	102-6808		Kit, Service, Antenna Assy., Plastic Pedestal ●■

● SERVICE ITEMS
▲ UHF Models Only
❑ Quantity Varies With Model
❍ Order Through Finished Goods Distribution System - Minneapolis
■ Not illustrated
◆ Not serviced separately

Network VP and VPe - 2013 and Later

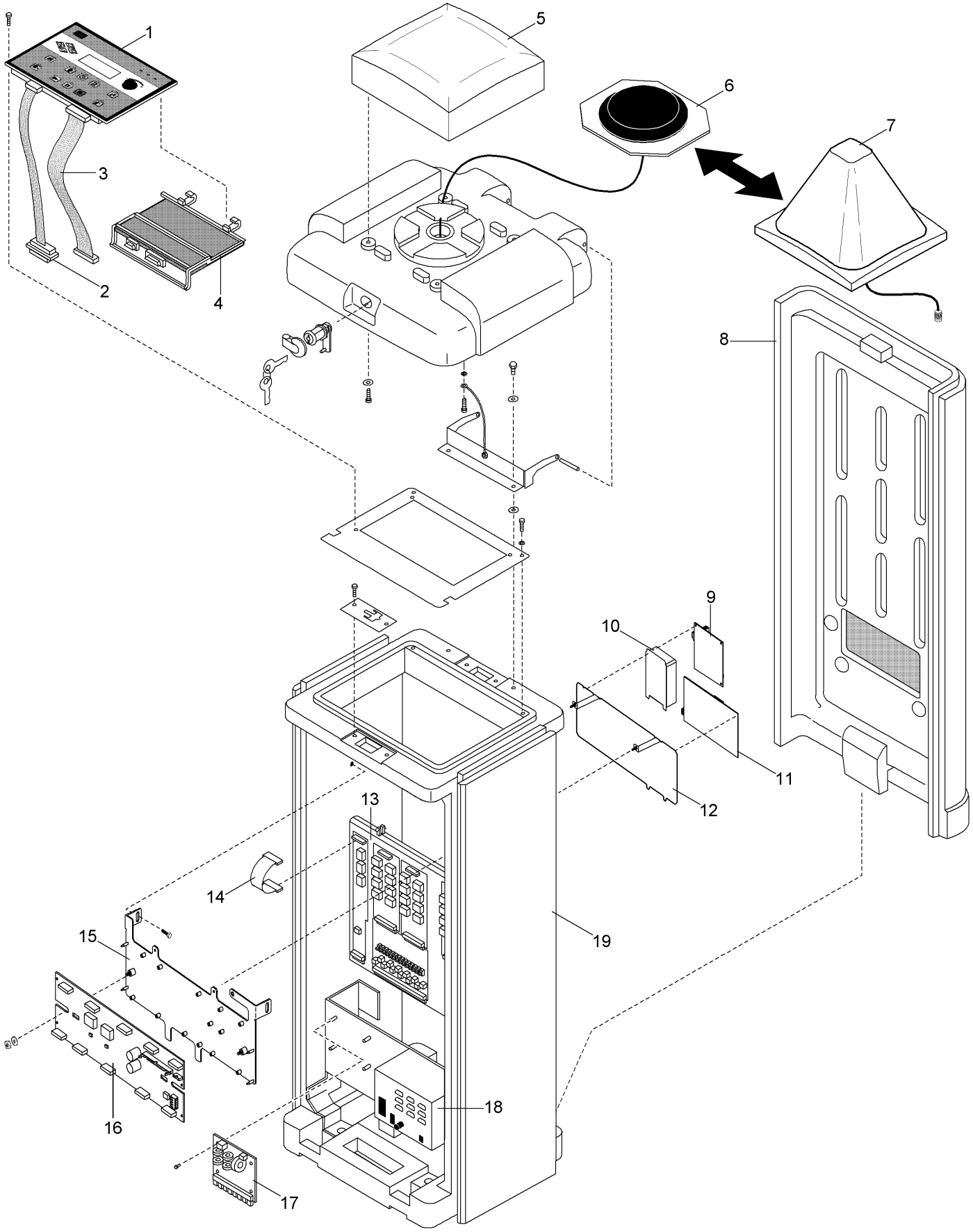

Network VP and VPe - 2013 and Later (continued)

Ref.	Part Number	Qty.	Description
1	102-3497SK	1	Timing Mechanism (Tm), Vp Satellite
2	102-4573SK	1	Cable Assy., Tm To Modem
3	102-3030SK	1	Cable Assy., Tm To Distribution, 12"
4	89-9026	1	Standard Modem, Svc.
4	364-1003	1	Cable Assy., Tm To Distribution, 18"
5		1	Cover, Satellite Lid (See Golf Controller Plastic Pedestal Cabinet Components Section) ●
6	102-6808	1	Kit, Service, Antenna Assy., Plastic Pedestal
7		1	Dome Antenna Assy., Plastic Pedestal ●
8		1	Satellite Plastic Pedestal & Components (See Golf Controller, Plastic Pedestal Cabinet Components Section) ●
9	102-3125SK	1	Radio Interface Board
10	363-4638SK	1	Maxon Radio
11	89-7701	1	Modem Assy., Universal, Service
12	118-1938SK	1	Bracket, Radio, Vertical
13		1	Vp Internal Components (See Vp Internal Components Section) ●
14	102-0670	5	Ribbon Cable, Distribution To Output, 4" Length
14	118-2736	5	Ribbon Cable, Distribution To Output, 12" Length
15	118-1937SK	1	Bracket, Power Distribution Board, Vertical
16	118-2737SK	1	Power Distribution Board, Straight Connectors
17	102-8086SK	1	Pcb Assy. Surge Board
18		1	Power Supply Assy. (See Power Supply Assembly Section) ●
19		1	Satellite Plastic Pedestal & Components (See Golf Controller, Plastic Pedestal Cabinet Components Section) ●

● Not serviced separately

Network VP and VPE - Internal Components

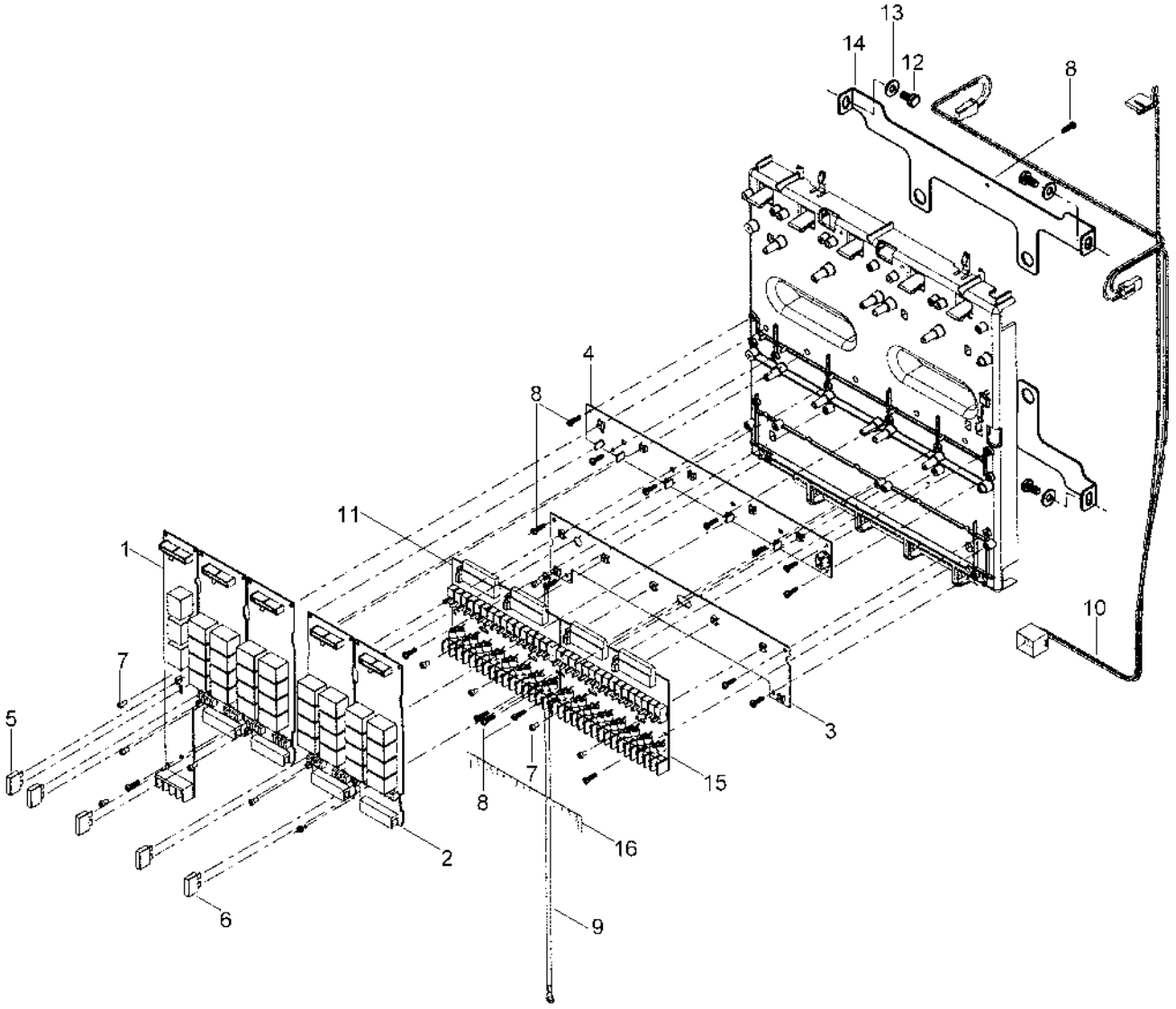

Network VP and VPE - Internal Components (continued)

Ref.	Part Number	Qty.	Description
1	102-3015SK	1	Pump/Common Module Assy. (Includes Items 5, 7 And 102-0670 Ribbon Cable)
2	102-0654		Output Module Assy., 8-Station (Includes Items 6, 7 And 102-0670 Ribbon Cable) ▲◆
3	102-0652	1	Ground Bus Bar Pcb Assy., Service (Includes Item 8)
4	102-0653	1	24 Vac Bus Bar Pcb Assy., Service (Includes Item 8)
5	102-0658	1	Fuse, 1.0 Amp, Fast-Blow, Service (5-Pack)
6	102-0657	4	Fuse, 3.0 Amp, Fast-Blow, Service (5-Pack)
7	102-0671	11	Screw, Machine, 6-32 X 1/4"
8	363-1355	20	Screw, Tap, #6
9	102-0685	1	Wire Harness Assy., Grounding
10	102-0686	1	Wire Harness Assy., Power Supply
N/I	102-0638		8-Station Terminal Block (M0 Surge Level) ▲◆●

Ref.	Part Number	Qty.	Description
11	102-0639		16-Station Module Assy. (M1 Surge Upgrade) (Includes Items 7 And 8) ▲◆
11	102-0640		16-Station Module Assy. (M2 Surge Upgrade) (Includes Items 7 And 8) ▲◆
11	102-0641		16-Station Module Assy. (M3 Surge Upgrade) (Includes Items 7 And 8) ▲◆
11	102-0642		16-Station Module Assy. (M4 Surge Upgrade) (Includes Items 7 And 8) ▲◆
12	360-0595	4	Screw, Machine, 1/4-20 X 1/2"
13	360-0140	4	Washer-Flat
14		2	Bracket, Mount Backplate ■
15	102-4586		Plastic Cover, Switches ▲
16	102-5940SK		Kit, Station Labels, Numbered, Plastic ▲

● Not illustrated
▲ Quantity Varies With Model
◆ Order Through Finished Goods Distribution System - Minneapolis
■ Not serviced separately

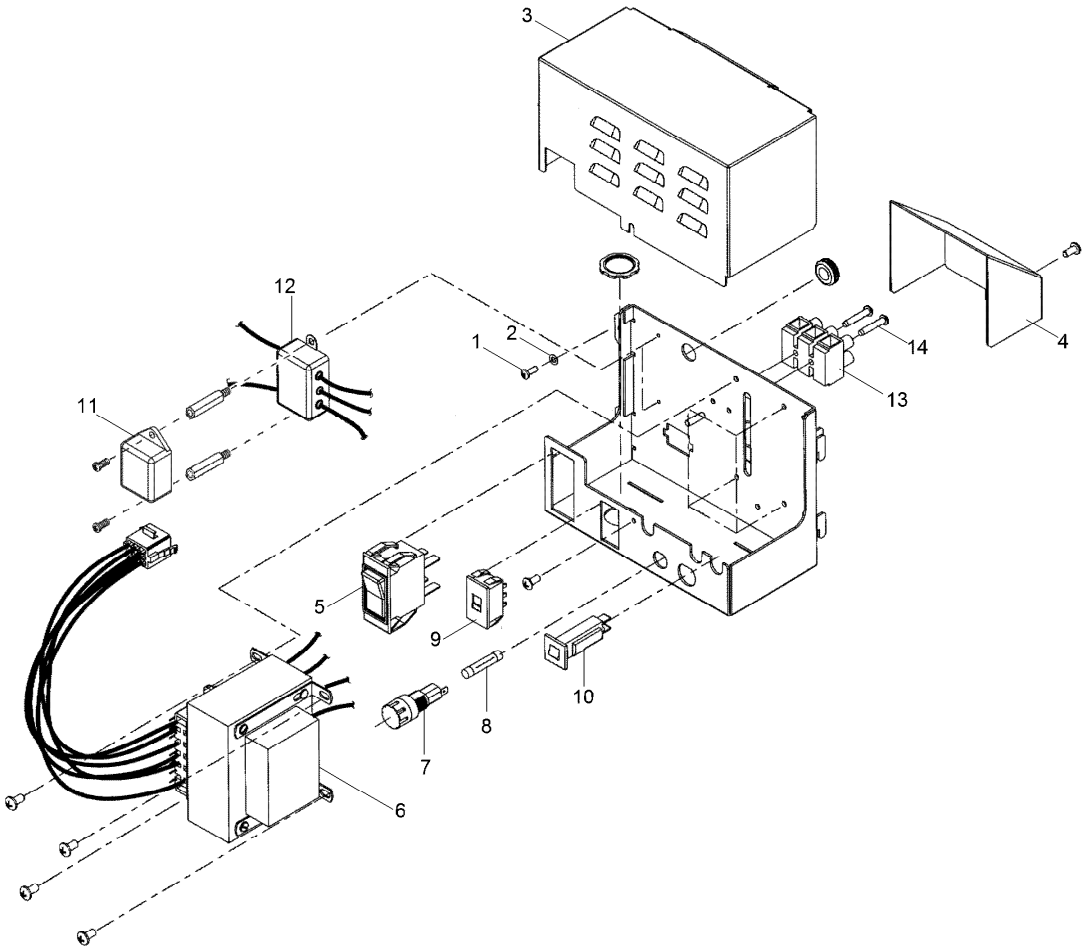

Network VP and VPE - Power Supply

Ref.	*Part Number*	*Qty.*	*Description*
1	4-1063	2	Screw, Tap, #6
2		2	Washer, Lock, #6 ◆
3	102-0646	1	Cover, Power Supply
4	102-0695	1	Cover, Wire Terminal
5	102-0666	1	On/Off Switch
6	102-0382	1	Transformer Assy., Service ●
6	102-3759	1	Transformer Assy., Service (For Japanese Models Only) ●
7	102-0649	1	Fuse Holder W/Cap
8	102-0650	1	Fuse, 3.2 Amp, Slow-Blow (10-Pack) ●
9	102-0648	1	Slide Switch 115/230V
10	102-0651	1	Circuit Breaker, 4.0 Amp
11	118-0538SK	1	Ttf Surge Protector
12	102-0700	1	Filter Assy., Rfi
13	102-0667	1	Terminal Block, 115/230V (Includes Item 14) ▲
14	360-0297	2	Screw, #6 X 3/4"
	102-0645	1	Power Supply Assembly (Includes Items 1-14) ■

● SERVICE ITEMS
▲ (Includes Item 14)

■ Not illustrated
◆ Not serviced separately

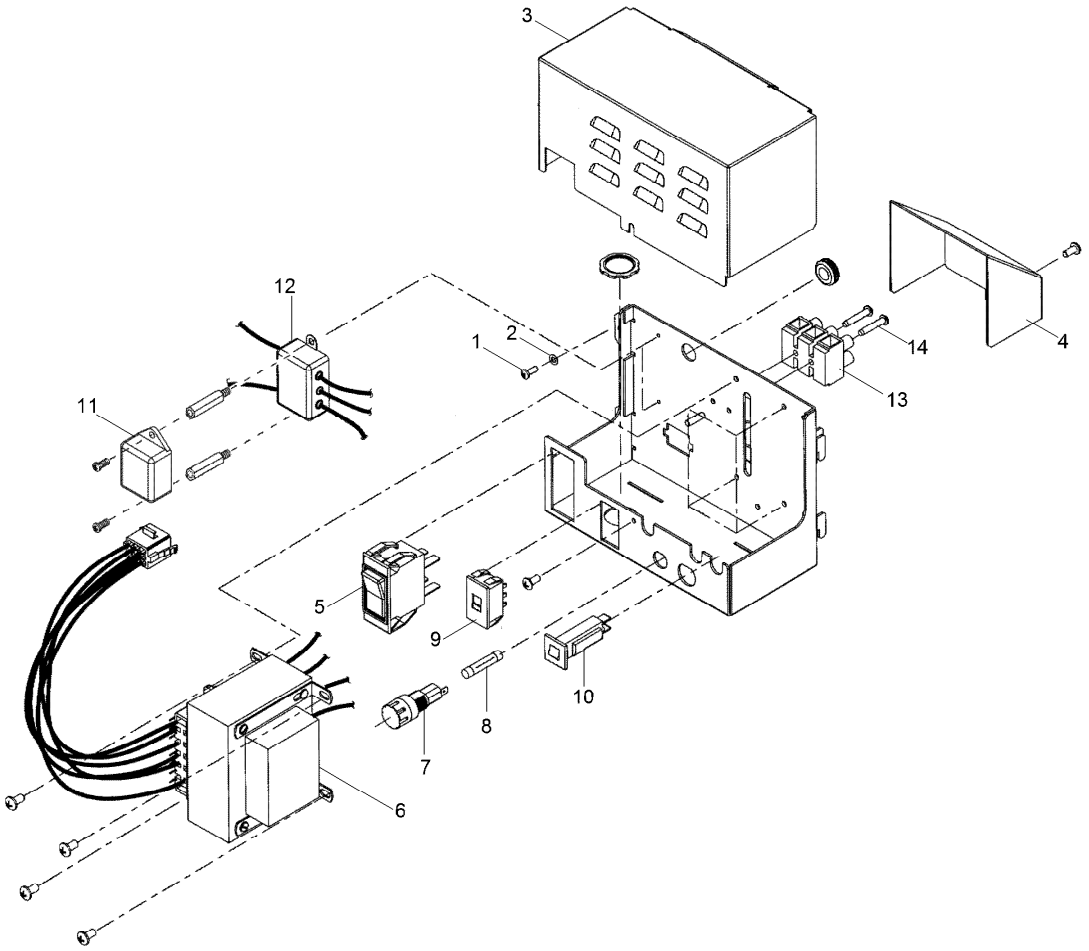

Network VP and VPE - Power Supply (continued)

● SERVICE ITEMS
▲ (Includes Item 14)

■ Not illustrated
◆ Not serviced separately

Network 8000 Sat., Plastic Cabinet, Int. Components

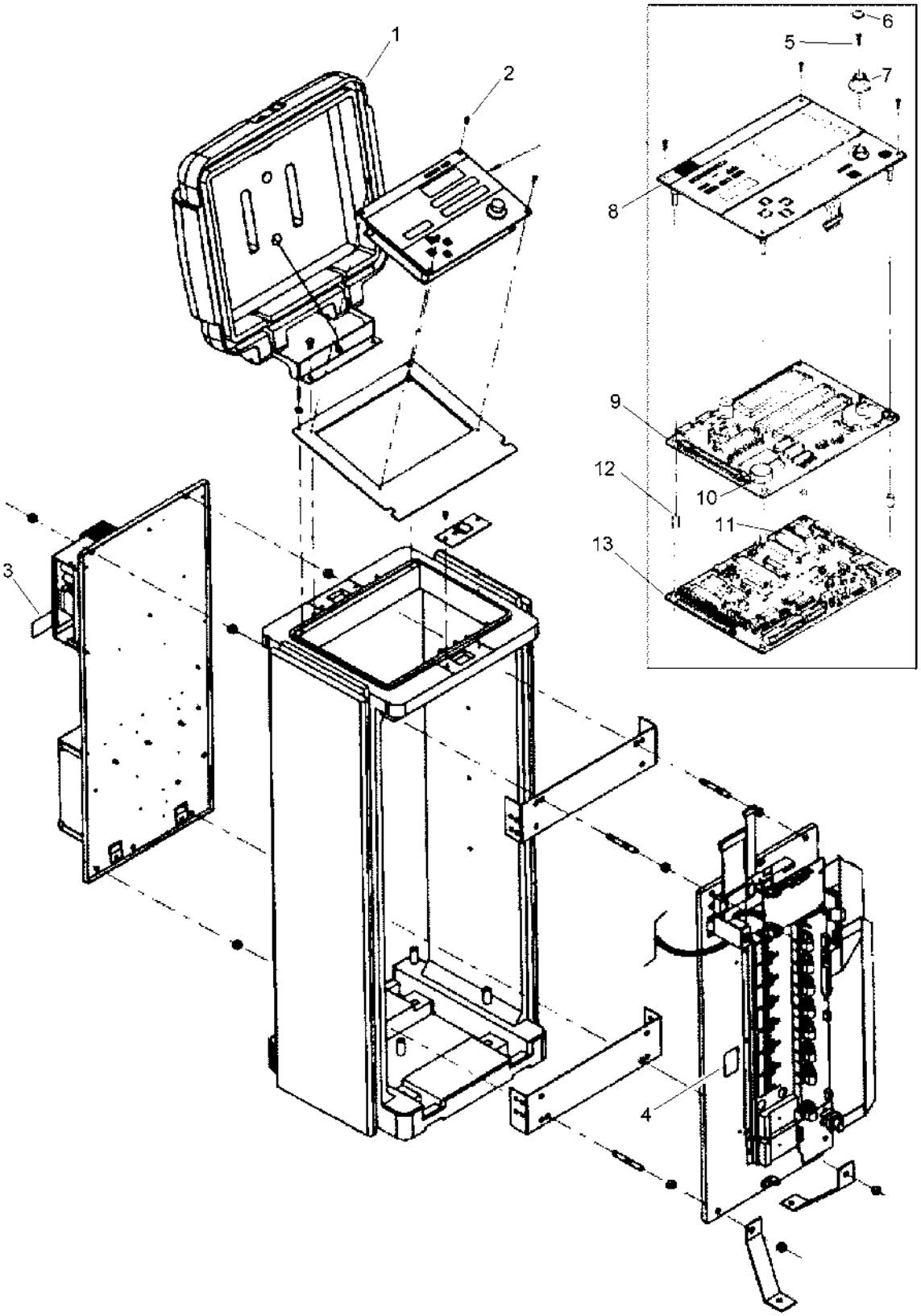

Network 8000 Sat., Plastic Cabinet, Int. Components (continued)

Ref.	Part Number	Qty.	Description
1			Satellite Plastic Pedestal & Components (See Plastic Satellite Pedestal Section) ▲
2	4-1063	6	Screw, Tap, #6
3		1	Label, Caution, Removable Door ▲
4		1	Label, Serial, Fcc ▲
5	363-1596	1	Screw, Tap, #6-19
6	35-7637	1	Cap, Knob
7	35-6237	1	Knob
8	35-6247	1	Faceplate Assy.
9	35-6246	1	Pcb Assy., Display
10	363-2200	1	Battery, 3.9V
11	91-0976	1	Ic, 27C256, Programmed (Eprom)
12	35-6243	4	Spacer
13	91-1790	1	Pcb Assembly, Processor
	9-1051		Mounting Hole Pattern Board ●■
	91-2340		Control Panel Assy., Service (Includes Items 5-13) ●■

● SERVICE ITEMS
▲ Not serviced separately
■ Not illustrated

Network 8000 Sat., Plastic Cabinet, 24V Output

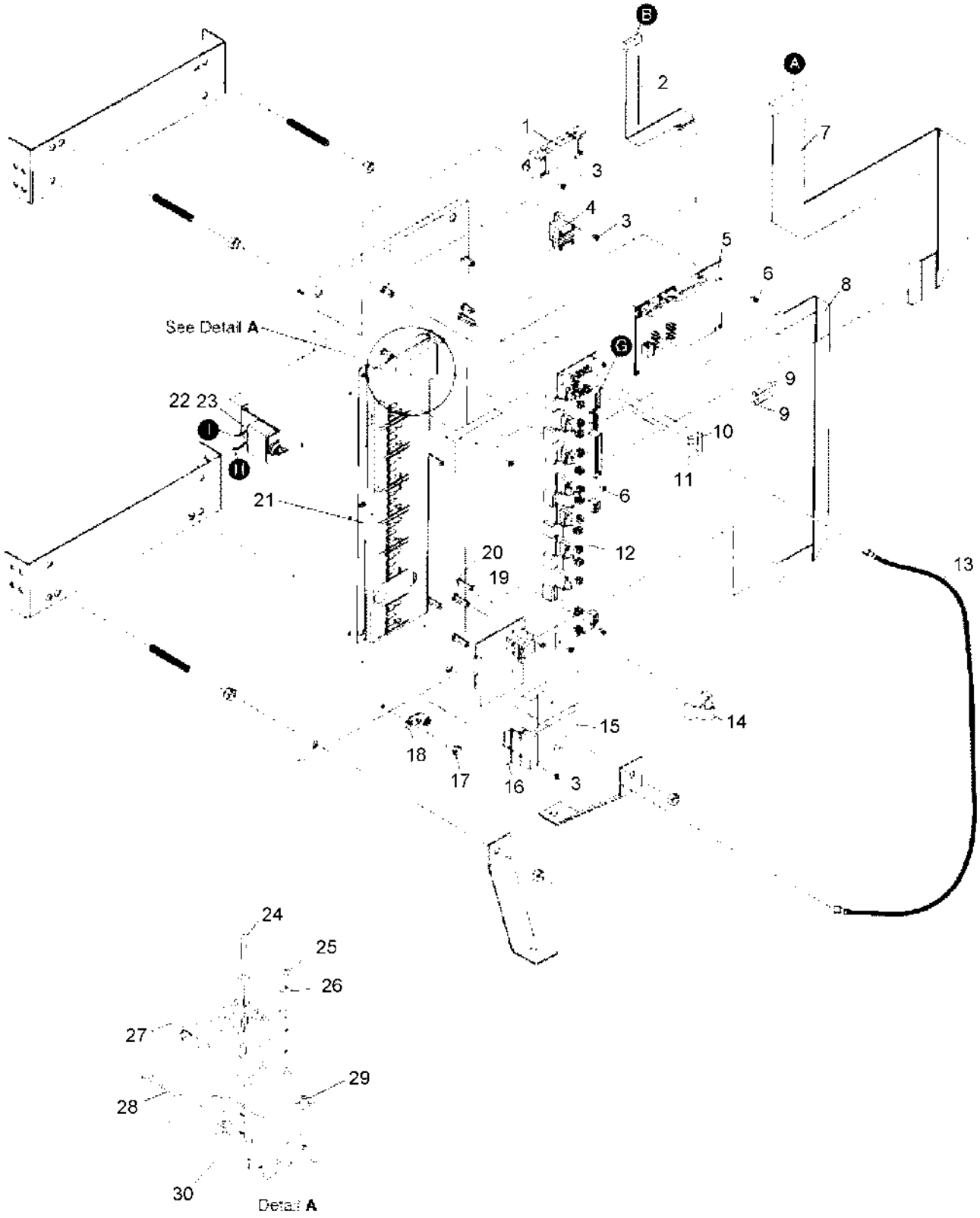

Note: For G, H & I connection, refer to Sheet 4 of 5.

Network 8000 Sat., Plastic Cabinet, 24V Output (continued)

Ref.	Part Number	Qty.	Description
1		1	Ferrite, Flat Cable, 3" ▲
2		1	Cable Assembly, Modem ▲
3	4-1063	9	Screw, Tap, #6
4		1	Ferrite, Flat Cable, 1.5" ▲
5	102-0864	1	Pcb Assembly, Standard Modem
6	360-0285	18	Screw, Machine, 6-32 X 3/8
7	35-8662	1	Cable Assembly, Fuse Board
8		1	Cable Assembly, Voltage Monitor ▲
9	102-3819	2	Fuse, 0.75 Amp (10-Pack)
10	363-2638	1	Fuse, 0.5 Amp
11	363-2497	8	Fuse, 3.2 Amp, Slow-Blow, Distribution
12	91-1783	1	Pcb Assembly, Fuse And Distribution
13		1	Wire Assembly, 18 Awg, Brown ▲
14	35-8664	8	Cable Assembly, Triac
15	91-1783	1	Pcb Assembly, Fuse And Distribution
16	35-6346	1	Bracket, Pump Triac Module
17	360-0595	1	Screw, Machine, 1/4-20 X 1/2"
18	363-1553	1	Lug, Grounding
19	363-2812	8	Standoff, #6-32 X 3/8
20	1-3079	12	Nut, Hex, 6-32
21	89-8150	1	Bracket, Triac Module
22		1	Bracket, Switch ▲
23	363-2370	1	Breaker, Circuit, 10 Amp
24	1-6051	9	Screw, #8 Phph, Steel
25	3-2698	32	Screw, Tap, #6-32 X 1/4
26	360-0600	72	Washer, Lock, Ext T
27	35-6399	8	Base Assembly, Triac
28	35-6418	36	Terminal Tab, Triac
29	363-2431	36	Screw, #6 X 1/2, Hi-Lo W/Clamp
30	35-6418	9	Terminal Tab, Triac
	89-8100		Assembly, Triac Module, Nw8K ● ■
	35-6399		Base Assembly, Triac ● ■

● SERVICE ITEMS
▲ Not serviced separately
■ Not illustrated

Network 8000 Sat., Plastic Cabinet, AC/DC PS

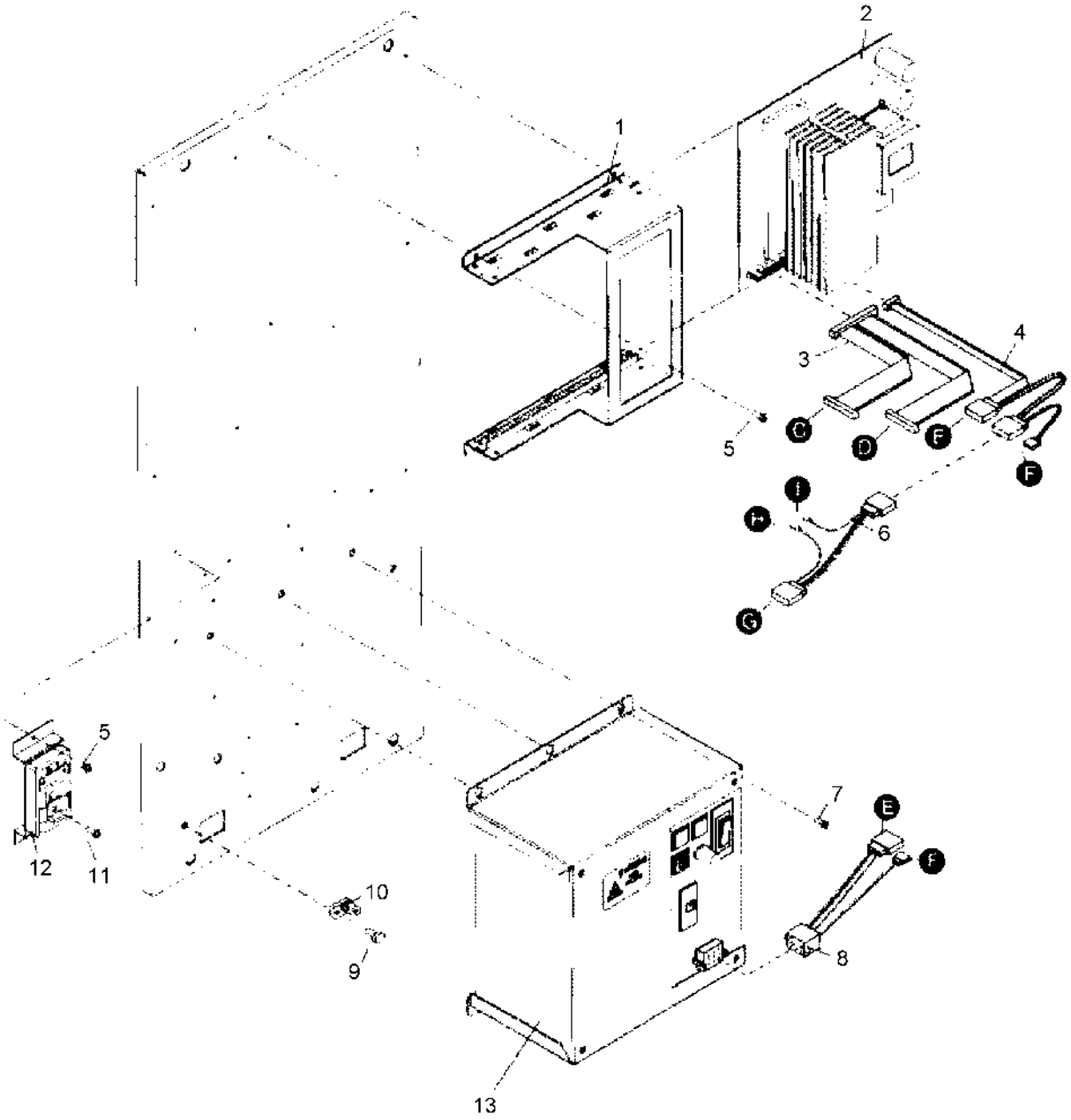

Note: For C & D connection, refer to **Sheet 1 of 5**. For G, H & I connection, refer to **Sheet 3 of 5**

Network 8000 Sat., Plastic Cabinet, AC/DC PS (continued)

Ref.	Part Number	Qty.	Description
1		1	Bracket, Ac-Dc, Nw8K ■
2	91-1779	1	Pcb Assembly, Power Supply
3		1	Cable Assembly, Pcn To Modem ■
4		1	Cable Assembly, Pcn To Power Supply ■
5	4-1063	6	Screw, Tap, #6
6		1	Cable Assembly, Pcn To Distribution Board ■
7	3-1453	3	Screw-PRH
8		1	Cable Assembly, Power Supply To Pcn ■
9	360-0595	1	Screw, Machine, 1/4-20 X 1/2"
10	363-1553	1	Lug, Grounding
11	363-3103	1	Screw, Tap, #6-19 X 3/4, Phph
12	35-8833	1	Bracket Assembly, Com Cable
13		1	Power Supply Assembly (See Power Supply Assembly Section) ■
	35-8833		Bracket Assembly, Com Cable (Includes Items 5, 11 & 12) ●

● Not illustrated

■ Not serviced separately

Network 8000 Sat., Plastic Cabinet, Power Supply

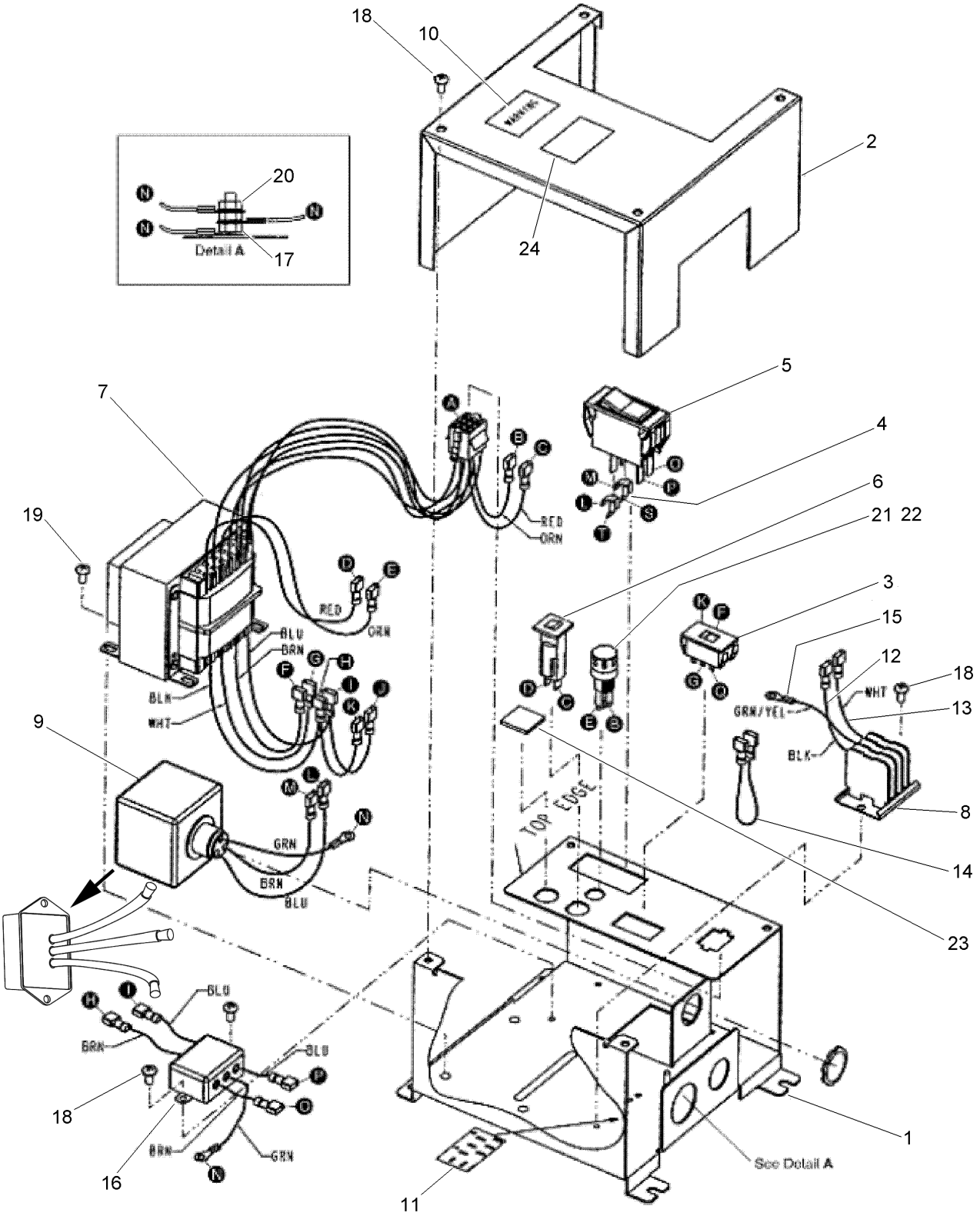

Network 8000 Sat., Plastic Cabinet, Power Supply (continued)

Ref.	Part Number	Qty.	Description
1		1	Case, Base, Standard Power Supply ■
2		1	Case Cover, Standard Power Supply ■
3	102-0648	1	Slide Switch 115/230V
4		1	Tab Adapter ■
5	363-3361	1	Switch, Circuit Breaker, 1.5 Amp
6	363-5270	1	Circuit Breaker, 4.0 Amp
7	89-8285	1	Transformer, Power Supply
8	363-2371	1	Terminal Block, 3-Position
9	118-0589SK	1	Surge Protector (Replaces Older Model)
10	89-0722	4	Label, Warning
11		2	Label, Terminal Block ■
12		1	Wire Assy., 18 Awg, Black ■
13		1	Wire Assy., 8 Awg White ■
14		1	Wire Assy., 18 Awg, Black ■
15		1	Wire Assy., 18 Awg, Green/Yellow ■
16		1	Rfi Filter Assembly ■
17	360-0600	1	Washer, Lock, External Tooth, #8
18	360-0498	4	Screw, Machine, #8-32 X 1/4" Phph Sst
19	3-1453	2	Screw, Machine, #10-32 X 3/8", Phph
20		1	Hex Nut, #8-32 W/Lock Washer ■
21	360-0750	1	Holder, Fuse
22	363-2497	1	Fuse, 3.2 Amp, Distribution
23		1	Cap, Blank ■
24		1	Label, Service Kit ■
	89-8279		Power Supply Module (Includes Items 1-24) ●

● Not illustrated

■ Not serviced separately

Network 8000 Sat., Small, Green Stainless Pedestal

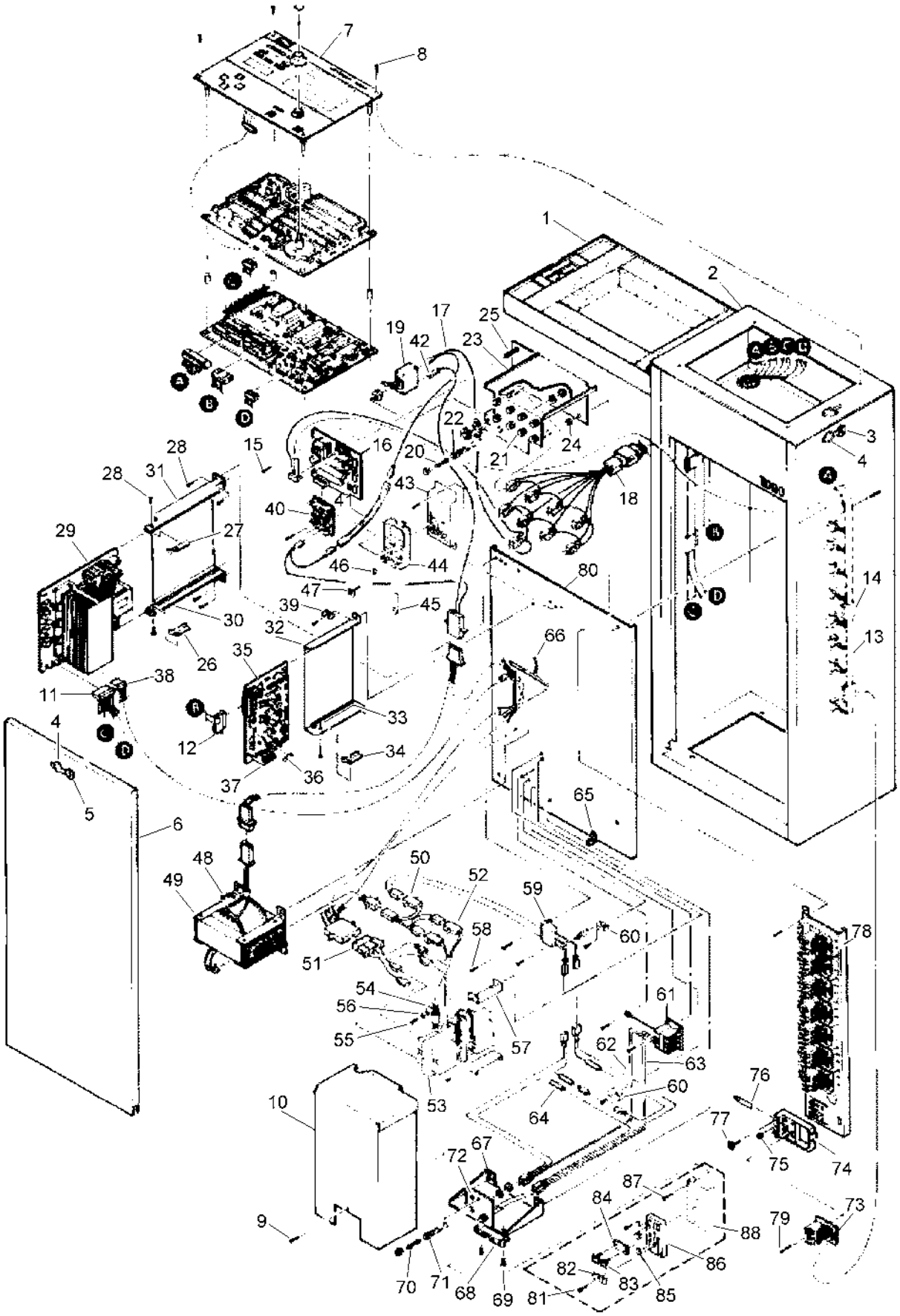

Network 8000 Sat., Small, Green Stainless Pedestal (continued)

Ref.	Part Number	Qty.	Description
1	9-4043	1	Lid Assy., Cabinet
2	89-0385	1	Cabinet, Tall
3	360-0583	1	Lock, Door
4	9-4303	2	Cover, Lock
5	360-0583	1	Lock, Door
6	9-1018	1	Door, Pedestal
7		1	Panel Assy., Control (See Control Panel Assembly)▲
8	360-0285	4	Screw, Machine, 6-32 X 3/8", Sst
9	3-2698	1	Screw, Tap, #6-32 X 1/4"
10	35-8706	1	Cover, Power Supply
11	35-8705	1	Cable Assy., Power
12	35-6328	1	Cable Assy., Modem
13	35-7605	1	Cable Assy., Triac Driver
14	363-2321	1	Clamp, Cable Flat
15	1-3076	1	Screw, 6-32 X 3/8"
16	91-1782	1	Pcb Assy., Valve Voltage Monitor
17	35-7286	1	Wire Assy., Fuse
18	35-7575	1	Cable Assy., Triac Fuse
19	363-2370	1	Breaker, Circuit, 10 Amp
20	363-2497	8	Fuse, 3.2 Amp, Distribution
21	363-2498	1	Fuse, 0.5 Amp Slow-Blow
22	360-0750	9	Holder, Fuse
23	35-7285	1	Bracket, Fuse
24	360-0594	1	Nut-Hex
25	363-2812	8	Standoff, #6-32 X 3/8
26	35-8704	1	Bracket, Retainer, Lower
27		1	Bracket, Retainer, Upper▲
28	4-1063	6	Screw, Tap, #6
29	91-1779	1	Pcb Assembly, Power Supply
30	363-2233	2	Guide, Card, Pcb 6-3/4"
31	35-8367	1	Bracket, Power Supply
32	35-8570	1	Bracket, Modem
33	363-2281	2	Guide, Card, Pcb,
34	35-8704	1	Bracket, Retainer, Lower
35	91-1781	1	Pcb Assy., Modem
36	363-2638	2	Fuse, .5 Amp
37	363-2231	1	Connector, 3-Pin, Female
38	35-8755	1	Cable Assy., Power Level 3
39	363-1346	3	Tab, Terminal, Kt-4
40	35-6326	1	Pcb Assy., Pump/Current Monitor
41	35-7888	1	Surge Protector Assy.
42	35-8796	1	Cable Assy., 24V
43	35-6346	1	Bracket, Pump Triac Module
44	35-6399	9	Base Assembly, Triac
45	35-6418	4	Terminal Tab, Triac
46	360-0471	4	Surge Protector
47	363-2431	4	Screw, #6 X 1/2", Hi-Lo W/Clamp
48	360-0355	1	Screw, Tap #8
49	35-8583	1	Transformer Assy., Triac
50	35-8793	1	Cable Assy., Transformer, 24V
51	35-8837	1	Cable Assy., Transformer, Power
52	363-1273	1	Connector, Pin
53	91-1288	2	Transformer Assy., 24V, 20 Va
54	1-7176	1	Clamp, Cable, Large
55	360-0355	1	Screw, Tap #8
56		1	Washer, Flat, #8, Brass▲
57	35-8174	2	Bracket, Transformer
58	4-1063	4	Screw, Tap, #6
59	35-8904	1	Filter Assy., Rfi
60	363-1346	2	Tab, Terminal, Kt-4
61	363-2371	1	Terminal Block, 3-Position
62	35-7841	1	Wire Assy., Fuse/Terminal Block, Black
63	35-7842	1	Wire Assy., Fuse/Terminal Block, White
64	360-0345	3	Surge Protector
65	363-1553	1	Lug, Grounding
66	35-7288	1	Clip, Ground
67		1	Bracket, Conduit▲
68	35-7738	1	Bracket, Pill Carrier
69	3-2698	5	Screw, Tap, #6-32 X 1/4"
70	363-2260	2	Fuse, 3 Amp
71	360-0750	2	Holder, Fuse
72	363-2459	1	Plug, Hole
73	35-6332	1	Pcb Assy., Triac Module
74	35-3434	1	Base, Triac Module
75	360-0471	32	Surge Protector
76	35-6418	32	Terminal Tab, Triac
77	363-2431	32	Screw, #6 X 1/2, Hi-Lo W/Clamp
78	35-8795	1	Bracket, Triac Module
79	1-1112	8	Screw, Tap #8 Sst
80	35-9703	1	Plate, Rear Mounting
81	360-0733	1	Screw, Tap, #6
82	363-2271	1	Clamp, Cable
83	363-2431	2	Screw, #6 X 1/2, Hi-Lo W/Clamp
84	35-7524	1	Strap
85	360-0471	2	Surge Protector
86	35-7458	1	Carrier, Surge Protector
87	363-1596	1	Scr,TAP,6-19X7/16,Phph, Stl, Rohs
88	35-7790	1	Bracket Assy., Surge Protector
	91-0987		Pcb Assy., Mod. 30, 286, Network 8000 (Snc)●■
	91-0488		Pedestal, Satellite, Network 8000, Small Stainless Steel (Includes Items 1-6)●■
	91-0291		Door Assy., Stainless Steel (Includes Items 4-6)●■
	9-4993		Door Assy., Green Metal Pedestal (Includes Items 4-6)●■
	9-1695		Lock Assy. (Includes Items 3 & 4)●■

● SERVICE ITEMS
▲ Not serviced separately
■ Not illustrated

Network 8000 Sat., Small, Green Stainless Pedestal (continued)

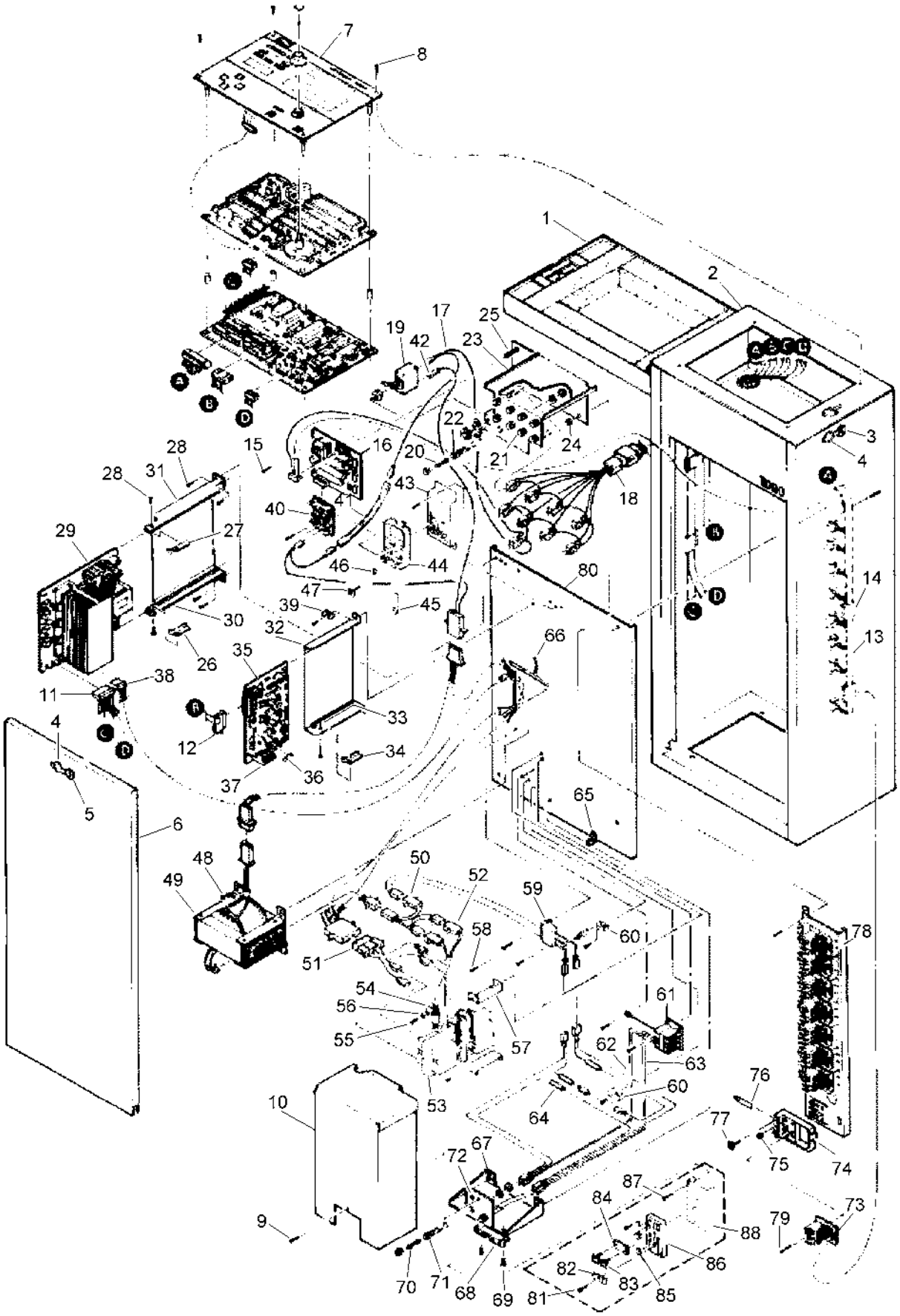

Network 8000 Sat., Small, Green Stainless Pedestal (continued)

Ref.	Part Number	Qty.	Description
	35-8741		Bracket And Fuse Assy. (Includes Items 67-72) ●■
	35-6399		Base Assembly, Triac Module (Includes Items 74-77) ●■
	35-8970		Kit, Installation, Network 8000 (Includes Items 81-88) ●■
	35-2355		Fuse Holder, Inline (Small Stainless Steel Pedestal Only) ●■

Ref.	Part Number	Qty.	Description
	363-2635		Fuse, 7.5 Amp ●■
	363-1684		Hex Nut, 5/16" (Small Stainless Steel Pedestal Only) ●■
	363-1683		Flat Washer, 5/16" (Small Stainless Steel Pedestal Only) ●■
	363-1686		Cap Screw, 5/16" X 4.5" (Small Stainless Steel Pedestal Only) ●■

● SERVICE ITEMS
▲ Not serviced separately
■ Not illustrated

Network 8000 Sat., Lrg. Stainless Pedestal (1 of 2)

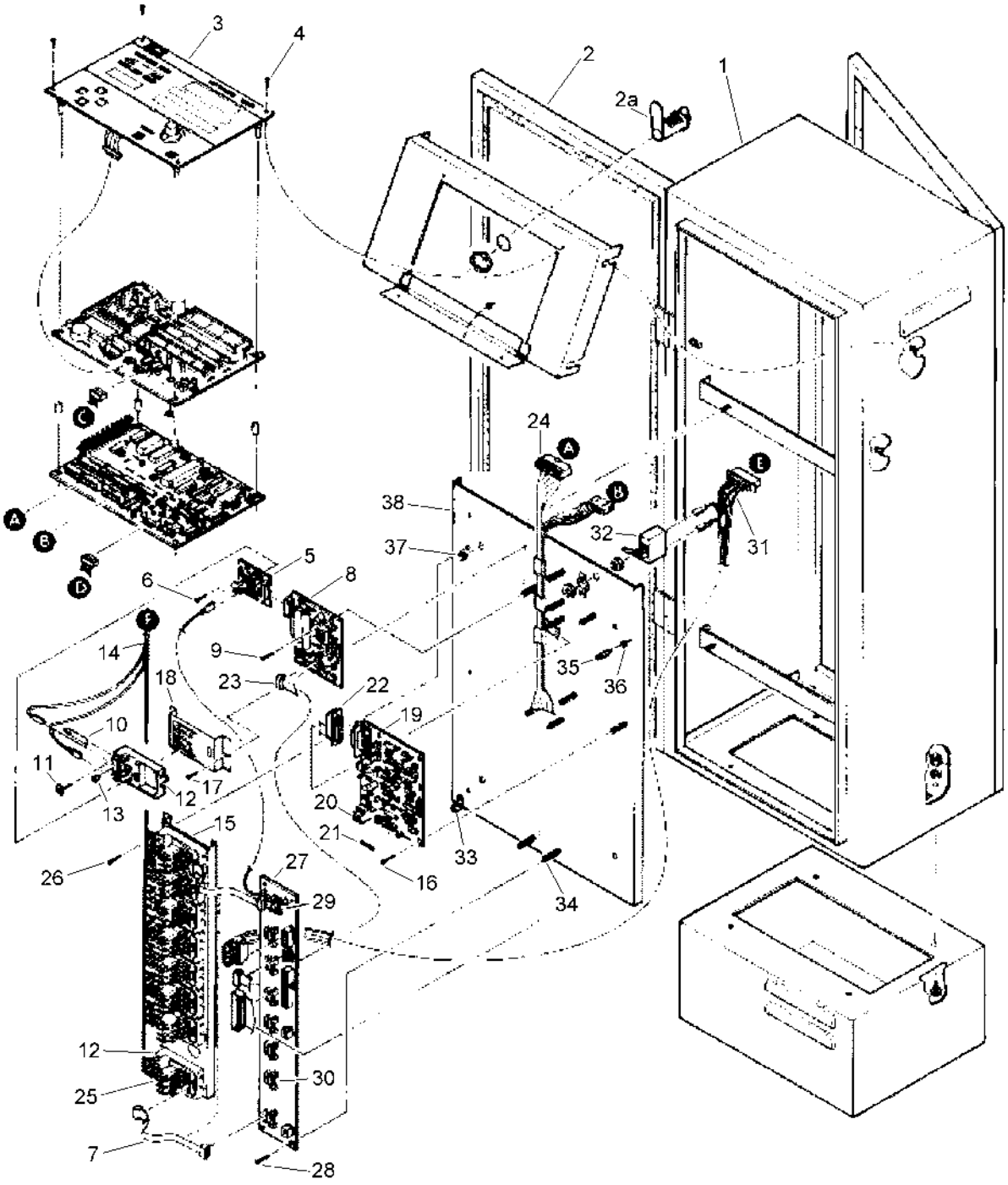

Network 8000 Sat., Lrg. Stainless Pedestal (1 of 2) (continued)

Ref.	Part Number	Qty.	Description
1	35-8480	1	Cabinet Assy., Pedestal Controller (Includes Items 1, 2, 2A, And 39) ●
2	91-0986	2	Door Assy., Cabinet (Includes Items 2 And 2A) ●
2A	363-2814	2	Lock Assembly (Includes Keys)
3		1	Control Panel Assy. (See Control Panel Assembly) ▲
4	360-0285	4	Screw, Machine #6-32 X 3/8", Sst
5	35-6326	1	Pcb Assy., Pump/Current Monitor
6	1-1112	1	Screw, Tap #8, Sst
7	35-8664	8	Cable Assembly, Triac Board
8	91-1782	1	Pcb Assy., Valve Voltage Monitor
9	1-3076	2	Screw, Tap, #6-32 X 3/8"
10	35-6418	4	Terminal Tab, Triac
11	363-2431	4	Screw, #6 X 1/2, Hi-Lo W/Clamp
12	35-3434	8	Base, Triac Module
13	360-0471	4	Surge Protector
14	35-8742	1	Cable Assy., Triac Module
15	35-8795	1	Bracket, Triac Module
16	1-3076	4	Screw, Tap, #6-32 X 3/8"
17	4-1063	2	Screw, Tap, #6
18	35-6346	1	Bracket, Pump Triac Module
19	89-7852	1	Pcb Assy., Modem (Includes Items 20 & 21)
20	363-2231	1	Connector, 3-Pin, Female
21	363-2638	1	Fuse, 0.5 Amp, 250V, 3Ag
22	35-6328	1	Cable Assy., Modem
23	35-8663	1	Cable Assy., Valve Voltage
24	35-8662	1	Cable Assembly, Fuse Board
25	35-6332	8	Pcb Assy., Triac Module
26	4-1063	6	Screw, Tap, #6
27	91-1783	1	Pcb Assembly, Fuse And Distribution
28	1-3076	4	Screw, #6-32 X 3/8"
29	363-2498	8	Fuse, 0.5 Amp Slow-Blow
30	363-2497	1	Fuse, 3.2 Amp, Distribution
31	35-8754	1	Cable Assy., Power, 24 V A.C.
32	363-2370	1	Breaker, Circuit, 10 Amp
33	363-1553	1	Lug, Grounding
34	363-2804	6	Standoff, Hex, #6-32 X 1/2"
35	363-2812	6	Standoff, #6-32 X 3/8"
36	1-3079	12	Nut, Hex, 6-32
37	360-0594	3	Nut, Hex, 1/4-20
38		1	Plate, Front Mounting ▲
	35-6399		Base Assembly, Triac Module (Includes Items 10-13) ■
	9-1051		Board, Mounting Hole Pattern ■
	363-1683		Washer, Flat, 5/16" ■
	363-1684		Nut, Hex, 5/16-18 ■
	363-1686		Screw, Cap 5/16" X 4" ■

● SERVICE ITEMS
▲ Not serviced separately
■ Not illustrated

Network 8000 Sat., Lrg. Stainless Pedestal (2 of 2)

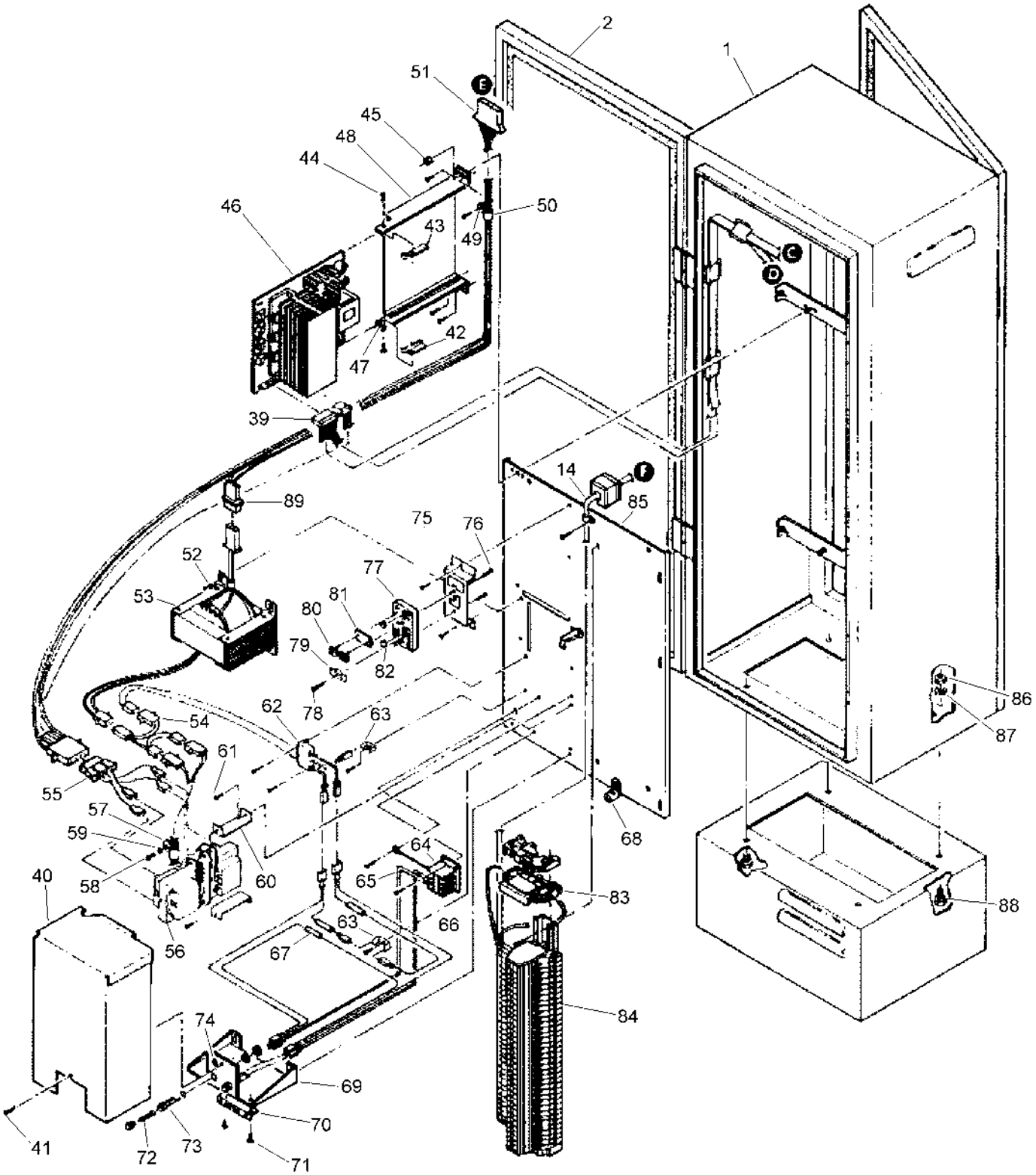

Network 8000 Sat., Lrg. Stainless Pedestal (2 of 2) (continued)

Ref.	Part Number	Qty.	Description
1	35-8480	1	Cabinet Assy., Pedestal Controller (Includes Items 1, 2, And 39) ●
2	91-0986	2	Door Assy., Cabinet (Includes Lock Assembly And Keys) ●
14	35-8742	1	Cable Assy., Triac Module
39	35-8705	1	Cable Assy., Power
40	35-6345	1	Cover, Power Supply
41	3-2698	1	Screw, Tap, #6-32 X 1/4
42	35-8704	1	Bracket, Retainer, Lower
43		1	Bracket, Retainer, Upper ▲
44	4-1063	2	Screw, Tap, #6
45	360-0594	1	Nut, Hex, 1/4-20
46	91-1779	1	Pcb Assembly, Power Supply
47	363-2233	2	Guide, Card, Pcb 6-3/4"
48	35-8367	1	Bracket, Power Supply
49		2	Washer, Flat, #8, Brass ▲
50	1-7176	1	Clamp, Cable, Large
51	35-8755	1	Cable Assy., Power Level 3
52	360-0355	1	Screw, Tap #8
53	35-8583	1	Transformer Assy., Triac
54	35-8792	1	Cable Assy., Transformer, 24V
55	35-8837	1	Cable Assy., Transformer, Power
56	91-1288	2	Transformer Assy., 24V, 20 Va
57	1-7176	1	Clamp, Cable, Large
58	360-0355	1	Screw, Tap #8
59		1	Washer, Flat, #8, Brass ▲
60	35-8174	2	Bracket, Transformer
61	4-1063	4	Screw, Tap, #6
62	35-8904	1	Filter Assy., Rfi
63	363-1346	2	Tab, Terminal, Kt-4
64	363-2371	1	Terminal Block, 3-Position
65	35-7841	1	Wire Assy., Fuse/Terminal Block, Black
66	35-7842	1	Wire Assy., Fuse/Terminal Block, White
67	360-0345	3	Surge Protector
68	363-1553	1	Lug, Grounding
69		1	Bracket, Conduit ▲
70	35-7738	1	Bracket, Pill Carrier
71	3-2698	5	Screw, Tap, #6-32 X 1/4"
72	363-2260	2	Fuse, 3 Amp
73	360-0750	2	Holder, Fuse
74	363-2459	1	Plug, Hole
75	35-8448	1	Bracket, Surge Protector
76	363-1596	1	Screw, Tap, #6-19
77	35-7458	1	Carrier, Surge Protector
78	363-3103	1	Screw, Tap, #6-19 X 3/4", Phph
79	363-2271	1	Clamp, Cable
80	363-2431	2	Screw, #6 X 1/2", Hi-Lo W/Clamp
81	35-7524	1	Strap
82	360-0471	2	Surge Protector
83	363-2635	1	Fuse, 7.5 Amp
84	363-2807	1	Terminal Strip
85	35-9703	1	Plate, Rear Mounting
86	363-1684	8	Nut, Hex, 5/16-18 ●
87	363-1683	4	Washer, Flat, 5/16" ●
88	363-1686	4	Screw, Cap, 5/16" X 1.5" ●
89	89-7464	1	Cable Assy., Y-Harness
	35-8833		Bracket Assembly, Com Cable (Includes Items 75-82) ●■
	35-8741		Bracket And Fuse Assy. (Includes Items 69-74) ●■
	35-9114		Lightning Protection Assy. (Includes Items 67) ●■
	35-8753		Transformer Assy., Power (Includes Items 56-60) ●■
	91-0987		Pcb Assy., Mod. 30, 286, Network 8000 (Snc) ●■
	35-9450		Pcb Assy., Sensor Input, Network 8000 Mc Unit ●■
	35-8472		Pressure Sensor Kit, Network 8000 Mc Unit ●■
	35-9427		Cable Assy., Pressure Sensor, Network 8000 Mc Unit ●■

● SERVICE ITEMS
▲ Not serviced separately
■ Not illustrated

Network 8000 Satellite Control Panel Assembly

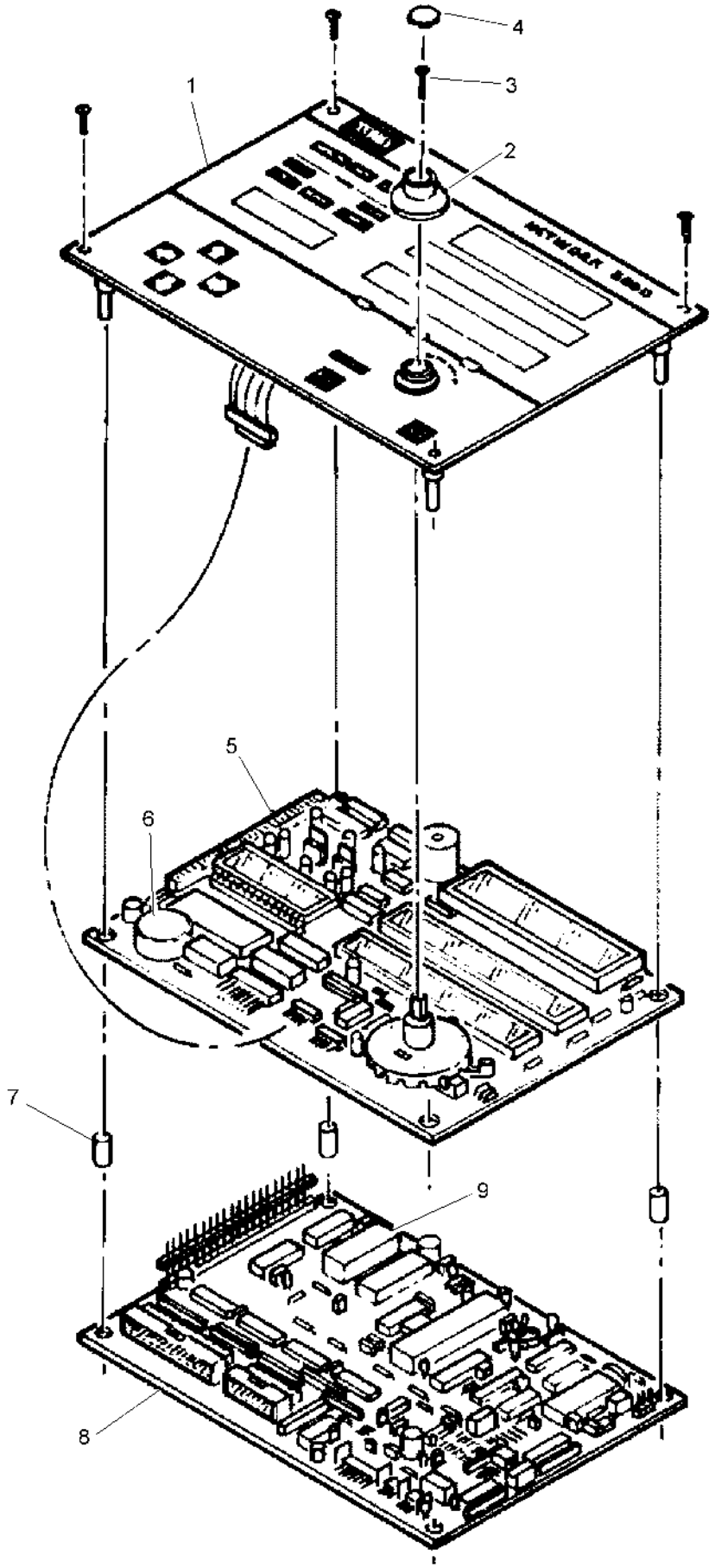

Network 8000 Satellite Control Panel Assembly (continued)

Ref.	Part Number	Qty.	Description
1	35-6247	1	Faceplate Assy.
1		1	Faceplate Assembly, Nw 8000 Mc Unit ▲
1		1	Faceplate Assembly, Nw 8000 Plc ▲
2	35-6237	1	Knob
3	363-1596	1	Screw, Tap, #6-19
4	35-7637	1	Cap, Knob
5	91-1784	1	Pcb Assy., Display, Nw 8000 Sat.
5	91-1791	1	Pcb Assy., Display, Nw 8000 Mc Unit
5	91-1282	1	Pcb Assy., Display, Nw 8000 Plc
6	363-2200	1	Battery, 3.9V
7	35-6243	4	Spacer
8	91-1790	1	Pcb Assembly, Processor
8	91-1786	1	Pcb Assy., Processor, Nw 8000 Mc Unit
8	91-1787	1	Pcb Assy., Processor, Nw 8000 Plc
9	995-94	1	Eprom, Network 8000 Satellite, Rev. 5.06
	91-2340		Control Panel Assy., Service (Includes Items 1-9) ●■
	91-1278		Control Panel Assembly, Network 8000 Mc Unit (Includes Items 1-9) ●■
	91-1800		Control Panel Assembly, Network 8000 Plc (Includes Items 1-9) ●■

● SERVICE ITEMS
▲ Not serviced separately
■ Not illustrated

Network DR2 Satellite (Early Model)

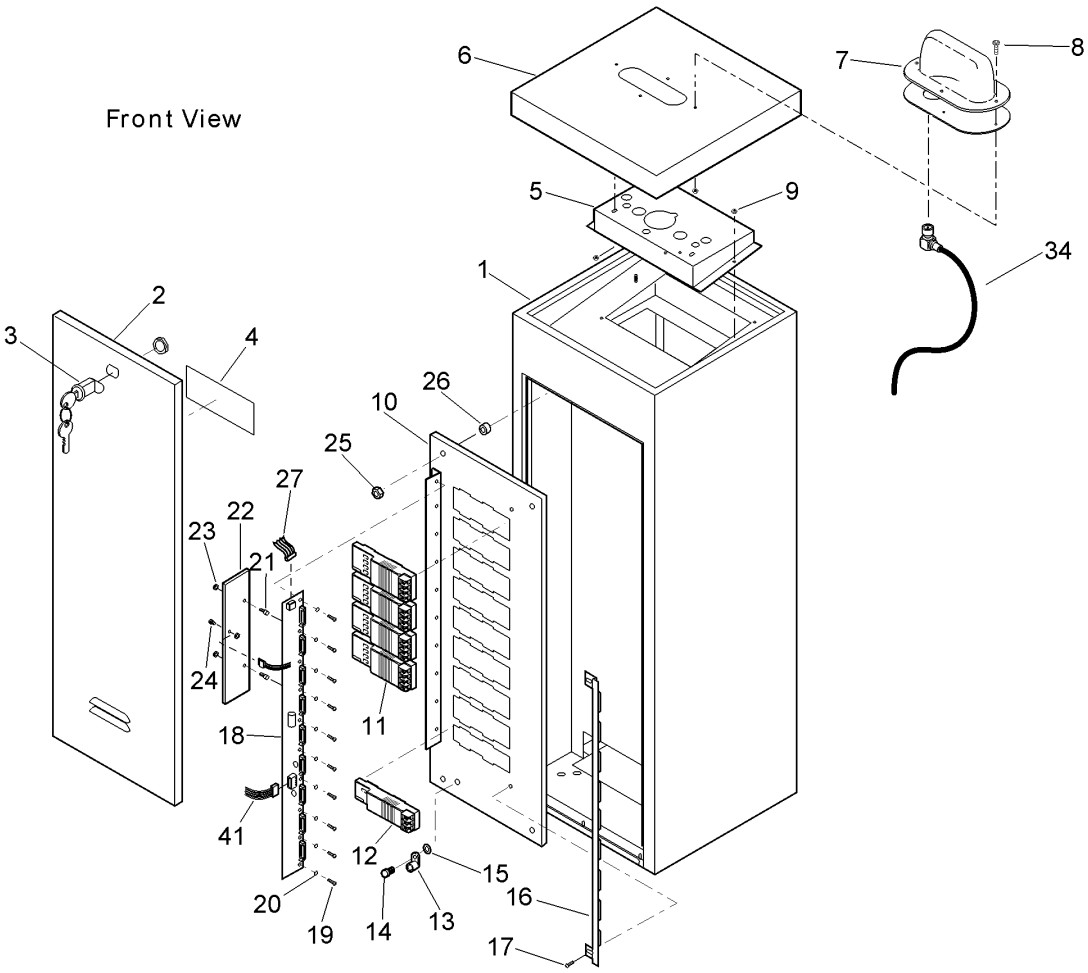

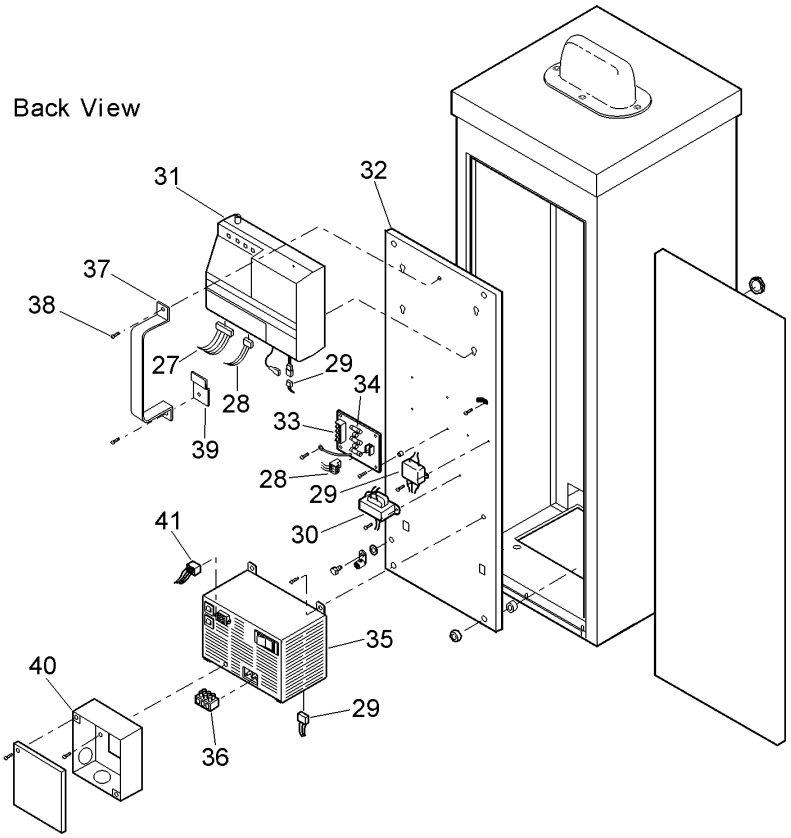

Network DR2 Satellite (Early Model) (continued)

Ref.	Part Number	Qty.	Description
1		1	Cabinet Assy., Pedestal, 13" X 13" ◆
2	89-7842	2	Door Assy. (Includes Item 3)
2	89-7846	2	Door Assy., Sst (Includes Item 3)
3	363-5369	2	Lock Assy., W/Keys
4	91-0910	2	Decal, Caution, Removable Door
5		1	Adapter, Pedestal, Lid ◆
6	89-7793	1	Lid, (Antenna-Mount)
6	89-7881	1	Lid, Sst (Antenna-Mount)
7		1	Antenna, Dome, 400-470 Mhz ◆
8		4	Screw, Machine, #10-32 X 5/8" ◆
9		8	Hex Nut, 10-32 W/Ext. Tooth Lock Washer ◆
10		1	Plate, Module, Mounting, 32 ◆
11	MOD-S4	4	Module Assy., Output ❑
12	89-7711	1	Module Assy., Pump
13	363-1553	1	Lug, Grounding
14		1	Screw, Machine, 1/4-20 X 1/2" ◆
15		2	Washer, Lock, 1/4" ◆
16	89-7394	1	Lock, Module
17	363-1752	2	Screw, Machine, #10-32
18	89-7786	1	Pcb Assy., Buf, Back Plane
19	360-0498	10	Screw, Machine, 8-32 X 1/4"
20		10	Washer, Lock, #8 ◆
21		2	Spacer, #8-32, M/F ◆
22		1	Heat Sink ◆
23		2	Hex Nut, #8-32 ◆
24	360-0285	1	Screw, Machine, 6-32 X 3/8
25	363-3236	8	Hex Nut, 5/16
26	900-41	8	Retainer, Tube, 5/16" (Used As Spacer) ❑
27	89-7771	1	Cable Assy., Output
28		1	Cable Assy. ◆
29	89-8001	1	Emi Filter Assy. (W/Cables) ▲
30	89-7979	1	Xfmr Assy., Isolation (W/Cables) ▲
31	DR2-00-01	1	Dr2 Scorpio, Frequency 1 ❑
31	DR2-00-02	1	Dr2 Scorpio, Frequency 2 ❑
31	DR2-00-03	1	Dr2 Scorpio, Frequency 3 ❑
31	DR2-00-04	1	Dr2 Scorpio, Frequency 4 ❑
31	DR2-00-05	1	Dr2 Scorpio, Frequency 5 ❑
31	DR2-00-06	1	Dr2 Scorpio, Frequency 6 ❑
31	DR2-00-AA	1	Dr2 Scorpio, Frequency, Special ❑
32	89-7750	1	Plate, Power Supply, Mounting
33	89-7682	1	Pcb Assy., Lcm/Sensor Interface
34	363-2638	38	Fuse, .5 Amp
35		1	Power Supply Assy. (See Power Supply Assembly Section) ◆
36	363-3216	1	Terminal Block, Socket
37		1	Bracket, Shipping ◆
38		2	Screw, Tap, #6, ◆
39		1	Bracket, Terminal, Scorpio ◆
40	89-7760		Box, Conduit, Mounting
41			Cable Assy., Power Supply ◆
	360-0565		Key ● ■
	89-7775		Lid Assy., Ped., Sst W/ Antenna (Includes Items 6-8) ● ■
	89-7880		Lid, Pedestal (Non-Antenna) ● ■
	89-7882		Lid, Pedestal, Sst (Non-Antenna) ● ■
	89-7789		Back Plate Assy., Dr2 (Includes Items 10-24) ● ■

● SERVICE ITEMS
▲ (Includes Cables)
❑ Order Through Finished Goods Distribution System - Minneapolis
■ Not illustrated
◆ Not serviced separately

Network DR2 Satellite - Plastic Cabinet

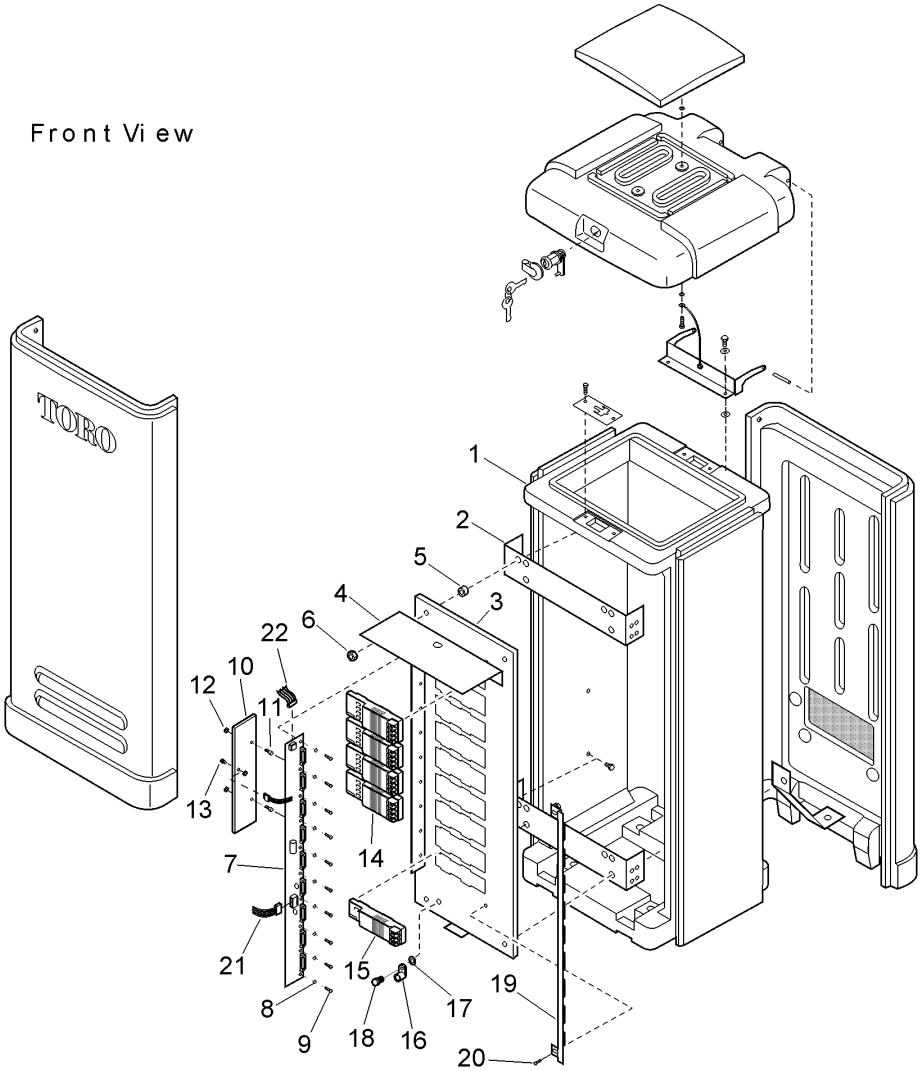

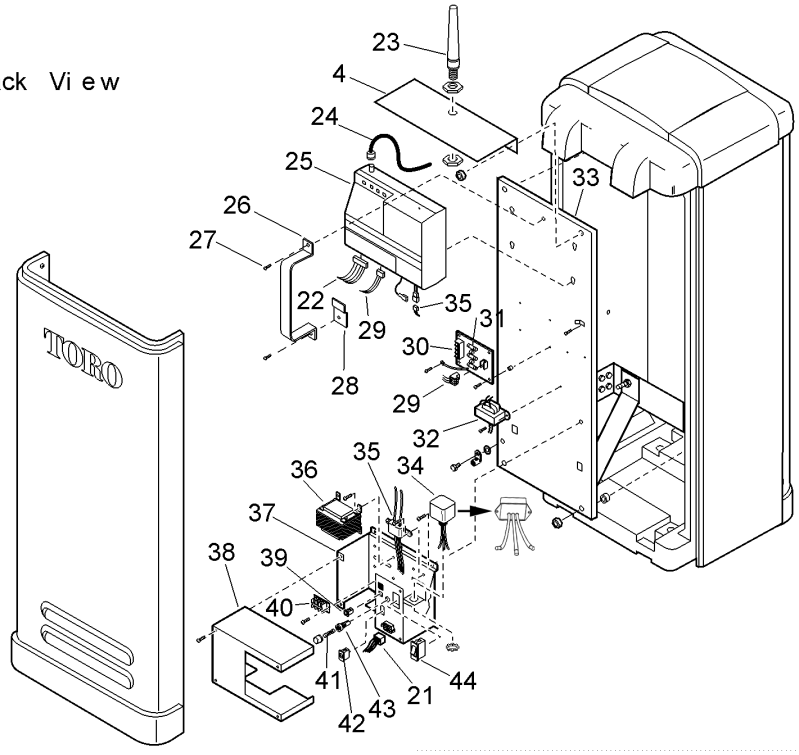

Network DR2 Satellite - Plastic Cabinet (continued)

Ref.	Part Number	Qty.	Description
1		1	Satellite Plastic Pedestal & Components ▲
2	89-8225	2	Bracket
3		1	Plate, Module, Mounting ▲
4		2	Bracket, Antenna ▲
5	900-41	8	Retainer, Tube, 5/16" (Used As Spacer) ◆
6	363-3236	8	Hex Nut, 5/16
7	89-7786	1	Pcb Assy., Buf, Back Plane
8		10	Washer, Lock, #8 ▲
9	360-0498	10	Screw, Machine, 8-32 X 1/4"
10		1	Heat Sink ▲
11		2	Spacer, #8-32, Male/Female ▲
12		2	Hex Nut, #8-32 ▲
13	360-0285	1	Screw, Machine, 6-32 X 3/8
14	MOD-S4	4	Module Assy., Output ◆
15	89-7711	1	Module Assy., Pump
16	363-1553	1	Lug, Grounding
17		2	Washer, Lock, 1/4" ▲
18		1	Screw, Machine, 1/4-20 X 1/2" ▲
19	89-7394	1	Lock, Module
20	363-1752	2	Screw, Machine, #10-32
21		1	Cable Assy., Power Supply ▲
22	89-7771	1	Cable Assy., Output
23	102-0655	1	Antenna, 450-475 Mhz, W/Bnc Connector ◆
24		1	Cable Assy., Antenna ▲
25	DR2-00-01	1	Dr2 Scorpio, Frequency 1 ◆
25	DR2-00-02	1	Dr2 Scorpio, Frequency 2 ◆
25	DR2-00-03	1	Dr2 Scorpio, Frequency 3 ◆
25	DR2-00-04	1	Dr2 Scorpio, Frequency 4 ◆
25	DR2-00-05	1	Dr2 Scorpio, Frequency 5 ◆
25	DR2-00-06	1	Dr2 Scorpio, Frequency 6 ◆
25	DR2-00-AA	1	Dr2 Scorpio, Frequency, Special ◆
26		1	Bracket, Shipping, ▲
27		2	Screw, Tap, #6 ▲
28		1	Bracket, Terminal, Scorpio ▲
29		1	Cable Assy. ▲
30	89-7682	1	Pcb Assy., Lcm/Sensor Interface
31	363-2638	3	Fuse, .5 Amp
32	89-7979	1	Xfmr Assy., Isolation (W/Cables)
33		1	Plate, Mounting, Back ▲
34	118-0538SK	1	Joslyn Surge Protector W/Nut (Replaces Older Model)
35	89-8001	1	Emi Filter Assy. (W/Cables)
36	102-0647	1	Transformer Assy., Svc.
37		1	Power Supply Metal Base ▲
38		1	Power Supply Metal Cover ▲
39	102-0651	1	Circuit Breaker, 4.0 Amp
40	363-3216	1	Terminal Block, Socket
41	102-0650	1	Fuse, 3.2 Amp, Slow-Blow (10-Pack)
42	102-0648	1	Slide Switch 115/230V
43	102-0649	1	Fuse Holder W/Cap
44	102-0666	1	On/Off Switch
	89-7789		Back Plate Assy., Dr2 (Includes Items 2, 3, 7, & 10-29) ●■

● SERVICE ITEMS
▲ Not serviced separately
◆ Order Through Finished Goods Distribution System - Minneapolis
■ Not illustrated

Network DR2 Satellite - Metal Cabinet (Late Model)

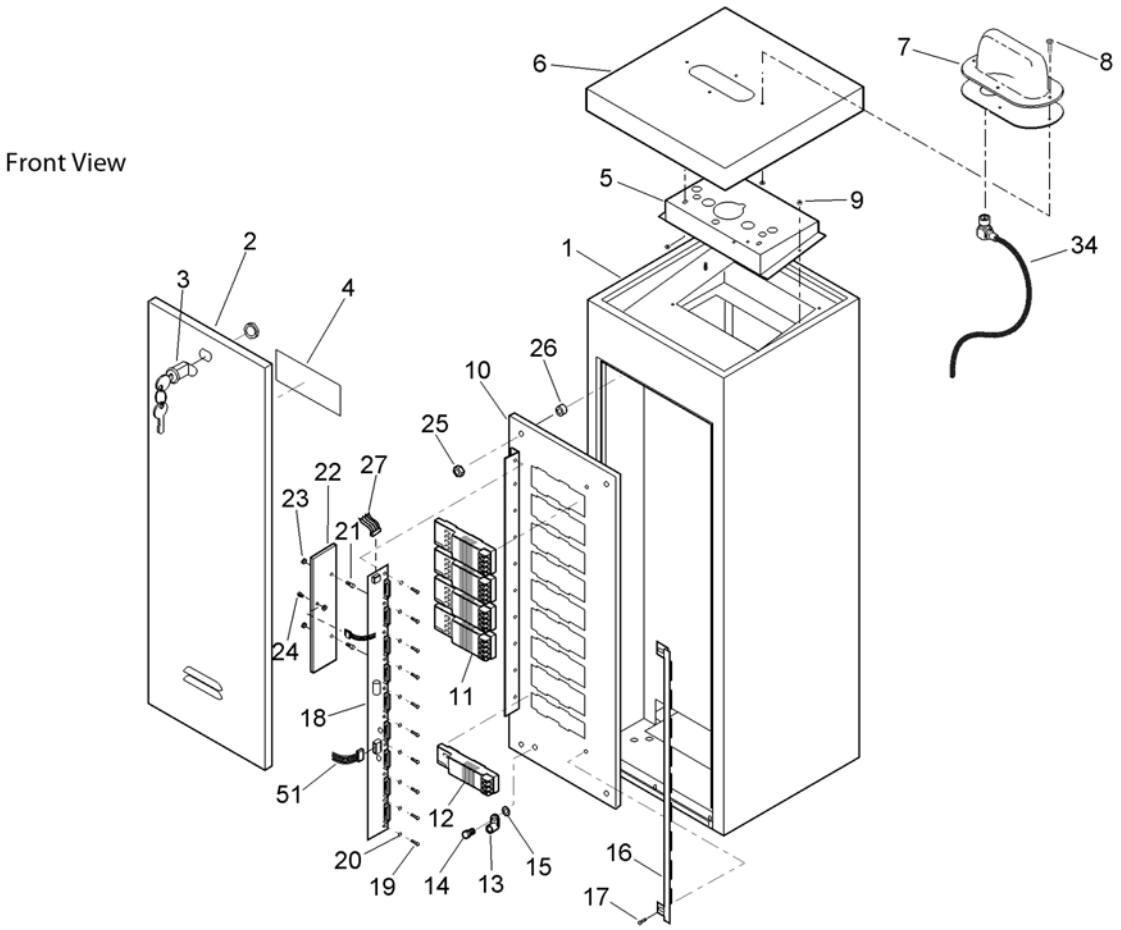

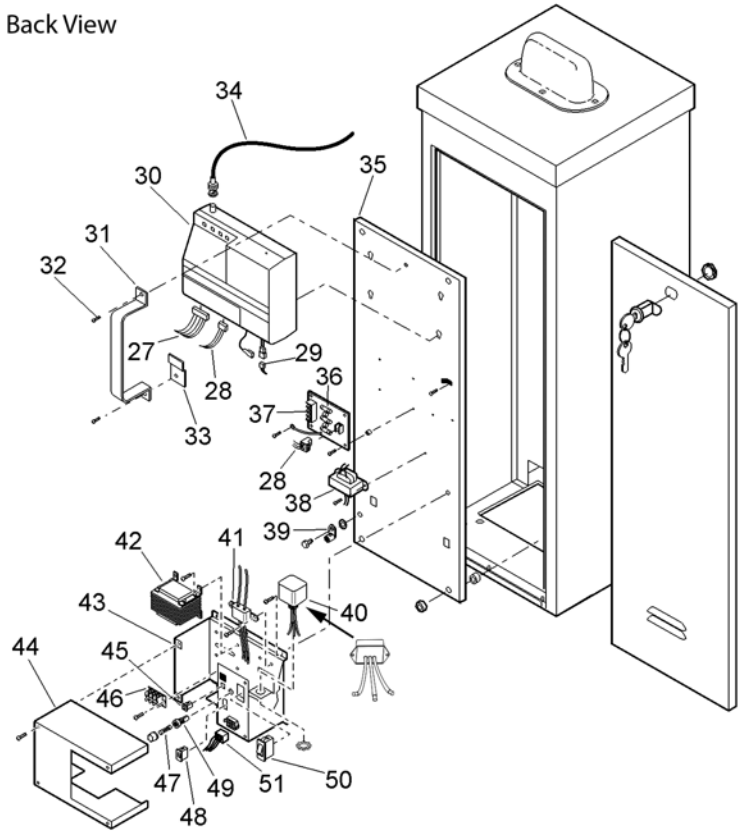

Network DR2 Satellite - Metal Cabinet (Late Model) (continued)

Ref.	Part Number	Qty.	Description
1		1	Cabinet Assy., Pedestal, 13" X 13" ▲
2	89-7842	2	Door Assy. (Includes Item 3)
2	89-7846	2	Door Assy., Sst (Includes Item 3)
3	363-5369	2	Lock Assy., Door
4	91-0910	2	Decal, Caution, Removable Door
5		1	Adapter, Pedestal Lid ▲
6		1	Lid, (Antenna-Mount) (See Service Item 89-7775) ▲
6		1	Lid, Sst (Antenna-Mount) (See Service Item 89-7775) ▲
7		1	Antenna, Dome, 400-470 Mhz (See Service Item 89-7775) ▲
8			Screw, Machine, #10-32 X 5/8" (See Service Item 89-7775) ▲
9		8	Hex Nut, #10-32 W/Ext T Lk ▲
10		1	Plate, Module, Mounting, 32 ▲
11	MOD-S4	4	Module Assy., Output ◆
12	89-7711	1	Module Assy., Pump
13	363-1553	1	Lug, Grounding
14		1	Screw, Machine, 1/4-20 X 1/2" ▲
15		2	Washer, Lock, 1/4 ▲
16	89-7394	1	Lock, Module
17	363-1752	2	Screw, Machine, #10-32
18	89-7786	1	Pcb Assy., Buf, Back Plane
19	360-0498	10	Screw, Machine, 8-32 X 1/4"
20		10	Washer, Lock, #8 ▲
21		2	Spacer, #8-32, Male/Female ▲
22		1	Heat Sink ▲
23		2	Hex Nut, #8-32 ▲
24	360-0285	1	Screw, Machine, 6-32 X 3/8
25	363-3236	8	Hex Nut, 5/16
26			Spacer ▲
27	89-7771	1	Cable Assy., Output
28		1	Cable Assy. ▲
29	89-8001	1	Emi Filter Assy. (W/Cables)
30	DR2-00-01	1	Dr2 Scorpio, Frequency 1 ◆
30	DR2-00-02	1	Dr2 Scorpio, Frequency 2 ◆
30	DR2-00-03	1	Dr2 Scorpio, Frequency 3 ◆
30	DR2-00-04	1	Dr2 Scorpio, Frequency 4 ◆
30	DR2-00-05	1	Dr2 Scorpio, Frequency 5 ◆
30	DR2-00-06	1	Dr2 Scorpio, Frequency 6 ◆
30	DR2-00-AA	1	Dr2 Scorpio, Frequency, Special ◆
31		1	Bracket, Shipping, ▲
32		2	Screw, Tap, #6, ▲
33		1	Bracket, Terminal, Scorpio ▲
34		1	Cable Assy., Antenna ▲
35	89-7750	1	Plate, Power Supply, Mounting
36	363-2638	3	Fuse, .5 Amp
37	89-7682	1	Pcb Assy., Lcm/Sensor Interface
38	89-7979	1	Xfmr Assy., Isolation (W/Cables)
39	363-1553	1	Lug, Grounding
40	118-0538SK	1	Joslyn Surge Protector W/Nut (Replaces Older Model)
41	89-8001	1	Emi Filter Assy. (W/Cables)
42	102-0647	1	Transformer Assy., Svc. ●
43		1	Power Supply Metal Base ▲
44		1	Power Supply Metal Cover ▲
45	102-0651	1	Circuit Breaker, 4.0 Amp
46	363-3216	1	Terminal Block, Socket
47	102-0650	1	Fuse, 3.2 Amp, Slow-Blow (10-Pack)
48	102-0648	1	Slide Switch 115/230V
49	102-0649	1	Fuse Holder W/Cap
50	102-0666	1	On/Off Switch
51		1	Cable Assy., Power Supply ▲
	360-0565		Keys, Lock (Golf #1382) ●■
	89-7775		Lid Assy., Ped., Sst W/ Antenna (Includes Items 6-8) ●■
	89-8158		Lid, Pedestal (Non-Antenna) ●■
	89-8159		Lid, Pedestal, Sst (Non-Antenna) ●■
	89-7789		Back Plate Assy., Dr2 (Includes Items 10-24) ●■

● SERVICE ITEMS
▲ Not serviced separately
◆ Order Through Finished Goods Distribution System - Minneapolis
■ Not illustrated

Network LTC 1.0 Satellite - Wall Mount Cabinet

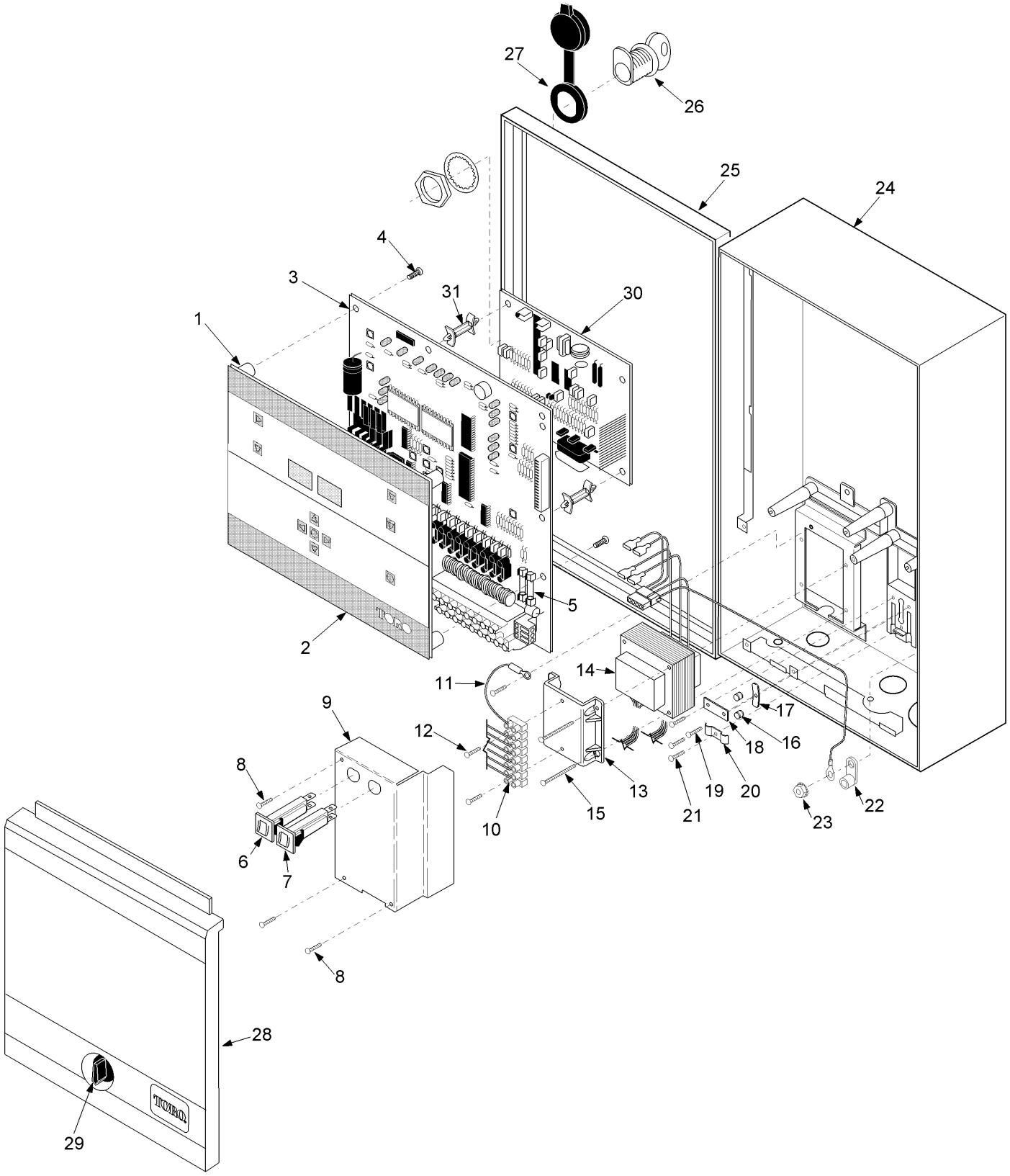

Network LTC 1.0 Satellite - Wall Mount Cabinet (continued)

Ref.	Part Number	Qty.	Description
1	91-0547	1	Front Plate Assy.
2	91-0784	1	Overlay, Ltc
3	91-0545	1	Pcb Assy., Ltc
4	363-1355	5	Screw, Tap, #6
5	363-2638	2	Fuse, .5 Amp
6	363-5271	1	Circuit Breaker, 0.75A
7	363-5270	1	Circuit Breaker, 4.0A
8	4-1063	3	Screw, Tap, #6
9		1	Cover, Transformer ▲
10	363-5219	1	Terminal Block, 8-Position
11	91-1005	1	Wire Assy., Green/Yellow
12	363-2033	2	Screw, Hi-Lo, #4-24
13	91-1030	1	Mount, Terminal Block
14	91-0919	1	Transformer Assy.
15	363-3103	2	Screw, Tap, #6-19 X 3/4, Phph
16	360-0471	2	Surge Protector
17	91-0790	1	Term. Plate, Contact
18	35-7524	1	Strap
19	363-2431	2	Screw, #6 X 1/2, Hi-Lo W/Clamp
20	363-2271	1	Clamp, Cable
21	363-5255	1	Screw, Machine, #6-32
22	363-1553	1	Lug, Grounding
23	360-0594	1	Nut-Hex
24		1	Cabinet Assy. ▲
25		1	Door Assy. ▲
26	363-1414	1	Lock
27	9-4303	1	Cover, Lock
28	91-0782	1	Cover, Terminal
29	363-2351	1	Latch, Pawl
30	91-0777	1	Pcb Assy., Modem
30	91-1046	1	Pcb Assy., Vt Adapter
31	363-2437	4	Standoff
	91-0786		Switch Actuator ■ ●
	360-0565		Keys, 2 W/ Ring (Golf #1382) ■ ●
	91-1331		Kit, Modem (Includes Items 30 & 31) ■ ●
	91-1200		Kit, Vt Adapter (Includes Transformer And Installation Accessories) ■ ●
	91-1213		Kit, Vt Adapter Transformer, Service ■ ●

● SERVICE ITEMS
▲ Not serviced separately
■ Not illustrated

Network LTC Satellite 1.0 - Taper-top Cabinet

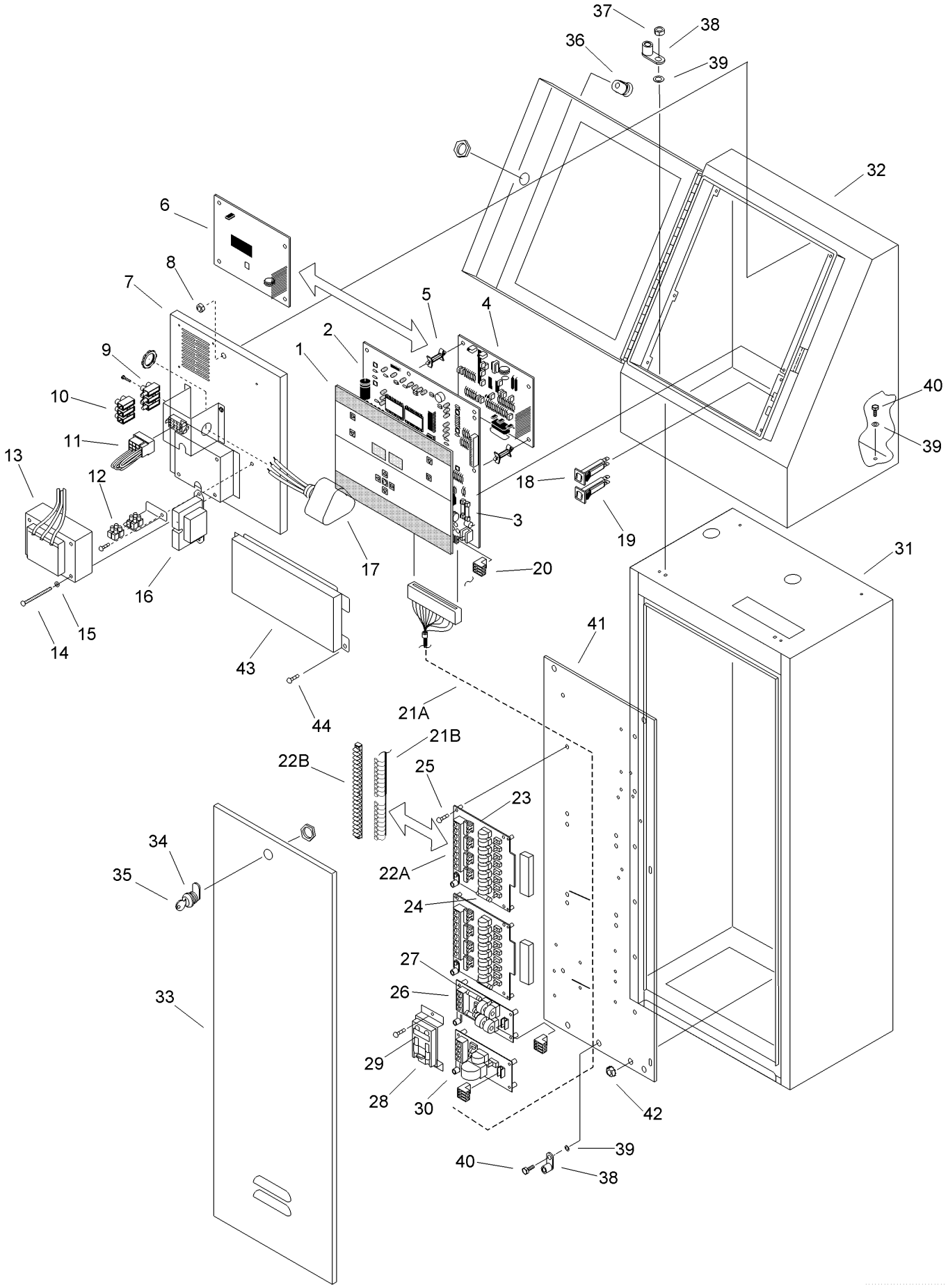

Network LTC Satellite 1.0 - Taper-top Cabinet (continued)

Ref.	Part Number	Qty.	Description
1	91-1591	1	Front Panel Assy., Tm
2	91-2337	1	Pcb Assy., Tm
3	363-2638	2	Fuse, Fast Blow, 0.5 Amp
4	91-1331	1	Pcb Assy., Ltc Modem
5	363-2437	4	Standoff, Dual Locking
6	91-1046	1	Pcb Assy., Vt Adapter
7		1	Backplate, Upper ▲
8	363-1752	1	Nut, Hex, Locking
9	363-3215	1	Terminal Block, Plug, 3-Position
10	363-3216	1	Terminal Block, Socket, 3-Position
11		4	Power Connector ▲
12	363-3230	1	Terminal Block, Plug, 2-Position
13	91-1636	1	Transformer
14	363-3205	4	Screw, #8-32 X 1.5"
15	360-0600	4	Washer, Lock, Ext T
16	363-1740	1	Transformer (Vt)
17	363-3202	1	Surge Protector
18	363-5271	1	Circuit Breaker, 0.75 Amp
19	363-5270	1	Circuit Breaker, 4.0 Amp
20	363-2231	1	Connector, 3-Pin, Female
21A	91-1641	1	Cable Assy., Surge
21B	91-1639	1	Cable Assy., Non-Surge
22A	91-1957	2	Pcb, Surge Protection, 8-Station
22B	363-3200	1	Terminal Block, 20-Position
23	360-0471	16	Surge Protector (Pill)
24	363-1222	2	Fuse, 3 Amp, Slow-Blow
25	363-5362	16	Screw, Tap
26	91-1307	1	Pcb Assy., Surge Protection, Communication
27	363-2638	2	Fuse, Fast Blow, 0.5 Amp
28	35-8833	1	Bracket Assembly, Communication
29	360-0471	2	Surge Protector (Pill)
30	91-1305	1	Pcb Assy., Surge Protection, Pump/Com
31	91-1587	1	Cabinet, 30" Galvanized (Includes Items 33-35)
31		1	Cabinet, 30" Sst (See Service Item 89-7486) ▲
32	91-1586	1	Cabinet, Taper Top, Galvanized (Includes Items 35 & 36)
32		1	Cabinet, Taper Top, Sst (See Service Item 89-7486) ▲
33		1	Door, Cabinet, 30" Galvanized (See Service Item 89-7485) ▲
33		1	Door, Cabinet, 30" Sst (See Service Item 89-7486) ▲
34	363-5369	1	Lock Assy., W/Keys, Door (Includes Item 35)
35	360-0565	1	Keys, Two W/ Ring (Golf #1382)
36		1	Lock Assy W/ Keys, Cabinet, Taper Top (Includes Item 35) ▲
37	360-0594	1	Nut, 1/4-20
38	363-1553	2	Lug, Grounding
39	363-1623	6	Washer, Lock
40	360-0595	4	Screw, Machine, 1/4-20 X 1/2"
41	91-1441	1	Mounting Plate, Rear
42	363-3236	4	Hex Nut, 5/16"
43		1	Cover, Access ▲
44	1-3076	2	Screw, Machine
	91-1593		Timing Mechanism Assy. (Includes Items 1-3) ●■
	89-7485		Cabinet Assy., Galvanized (Includes Items 31-40) ●■
	89-7486		Cabinet Assy., Sst (Includes Items 31-40) ●■

● SERVICE ITEMS
▲ Not serviced separately
■ Not illustrated

Network LTC Satellite 2.0 - Metal Cabinet (1 of 3)

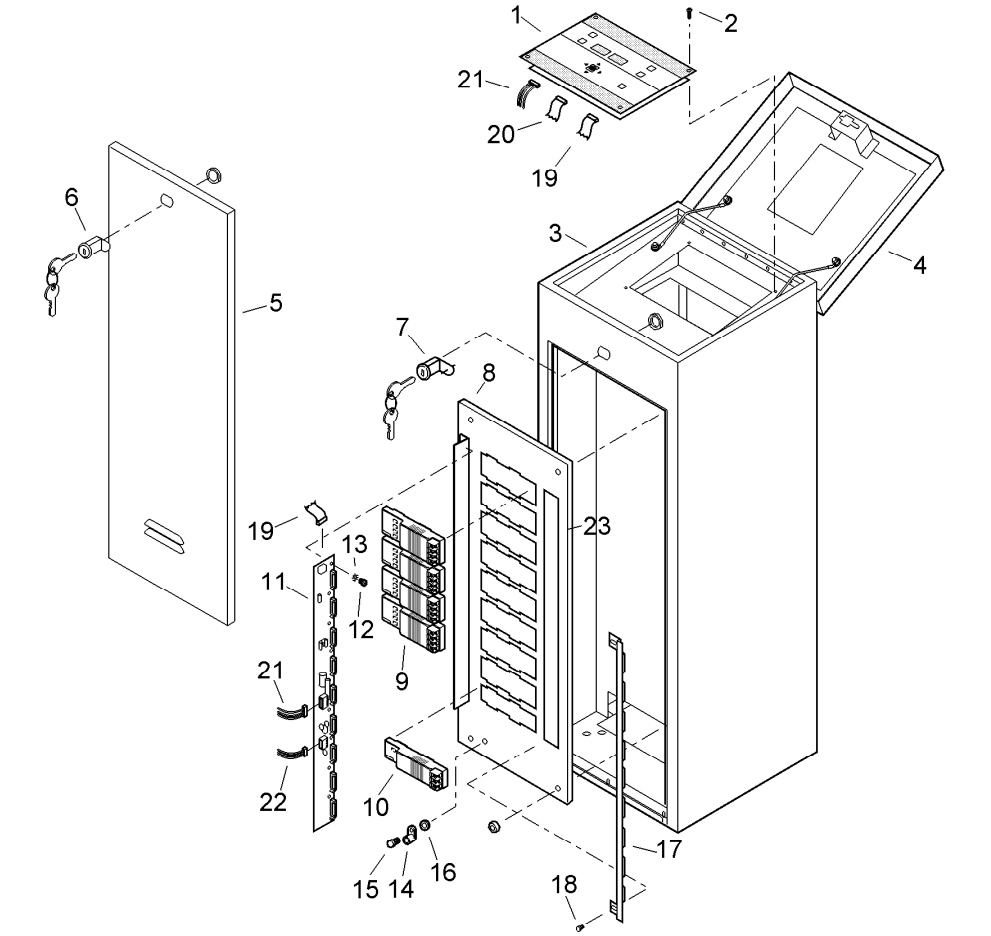

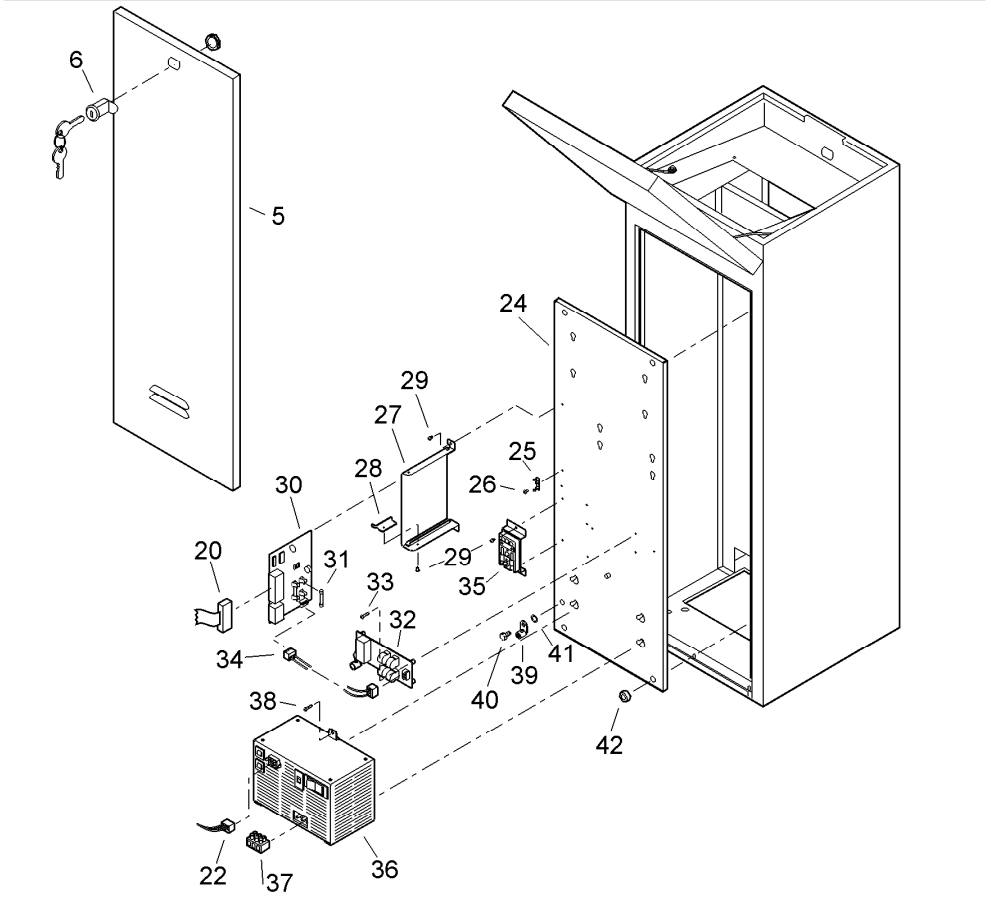

Network LTC Satellite 2.0 - Metal Cabinet (1 of 3) (continued)

Ref.	Part Number	Qty.	Description
1	89-7708	1	Timing Mechanism Assy., Ltc 2.0
2	360-0285	4	Screw, Machine, 6-32 X 3/8
3	89-7983	1	Pedestal Assy. 13 X 13 Sst (Includes Items 3-8)
4		1	Lid Assy., Pedestal (See Item 89-7983) ▲
5		2	Door Assy., Pedestal (See Item 89-7983) ▲
6	363-5369	2	Lock Assy., Door
7	9-1695	1	Lock Assy., Lid
8	89-6730	1	Back Plate, Module
9	MOD-S4	4	Module Assy., Output ◆
10	89-7711	1	Module Assy., Pump
11	89-7710	1	Back Plane Pcb Assy.
12	360-0498	10	Screw, Machine, 8-32 X 1/4"
13		10	Washer, Lock, #8 ▲
14	363-1553	1	Lug, Grounding
15		1	Screw, Machine, 1/4-20 X 1/2" ▲
16		1	Washer, Lock, Internal Tooth, 1/4" ▲
17	89-7394	1	Lock, Module
18		2	Screw, Machine, 10-32 ▲
19	89-7706	1	Cable Assy., Output Module
20	35-6328	1	Cable Assy., Modem
21	89-7707	1	Cable Assy., Power To Tm
22	89-7335	1	Cable Assy., Power Supply
23	35-6394	1	Label, Station
24	89-6944	1	Back Plate, Power Supply
25	35-7288	1	Clip, Grounding
26	1-3082	1	Screw, Machine, #4-40 X 1/2", Electric
27	35-8570	1	Bracket, Modem
28	35-8704	1	Bracket, Retainer, Lower
29	363-5072	5	Screw, Tap, #6
30	89-7852	1	Modem Assy., Standard (Includes Item 31)
30	89-7680	1	Modem Assy., Ltc/Vt Adapter, 2.0
31	102-3819	2	Fuse, 0.75 Amp (10-Pack)
32	91-1307	1	Pcb Assy., Surge Protection, Communication
33	363-5362	4	Screw, Tap, #6
34	91-1405	1	Cable Assy., Comm.
35	35-8833	1	Bracket Assembly, Com Cable
36		1	Power Supply (See Power Supply Assembly Section) ▲
37	363-3216	1	Terminal Block, Socket
38		1	Screw, Tap, 10-32 X 3/8" ▲
39	363-1553	1	Lug, Grounding
40		1	Screw, Machine, 1/4-20 X 1/2" ▲
41		1	Washer, Lock, Internal Tooth, 1/4" ▲
42		8	Nut, 5/16-20 ▲
	360-0565		Keys, Two W/ Ring (Golf #1382) ● ■
	89-7701		Modem Assy., Universal, Service ■ ●
	89-7709		Back Plate Assy. W/ Output Modules (Includes Items 8-18) ● ■
	89-7705		Back Plate Assy. W/Power Supply (Includes Items 24-42) ● ■
	363-2200		Battery, 3.9V ■ ●
	89-7172		Eprom Rev. 2.5 ■ ●
	89-8118		2.5 Upgrade Kit (Includes 2.5 Eprom, Installation Instructions, And Faceplate Decal) ◆ ■ ●

● SERVICE ITEMS
▲ Not serviced separately
◆ Order Through Finished Goods Distribution System - Minneapolis
■ Not illustrated

Network LTC Sat. 2.0, Network DR2 PS Assy (3 of 3)

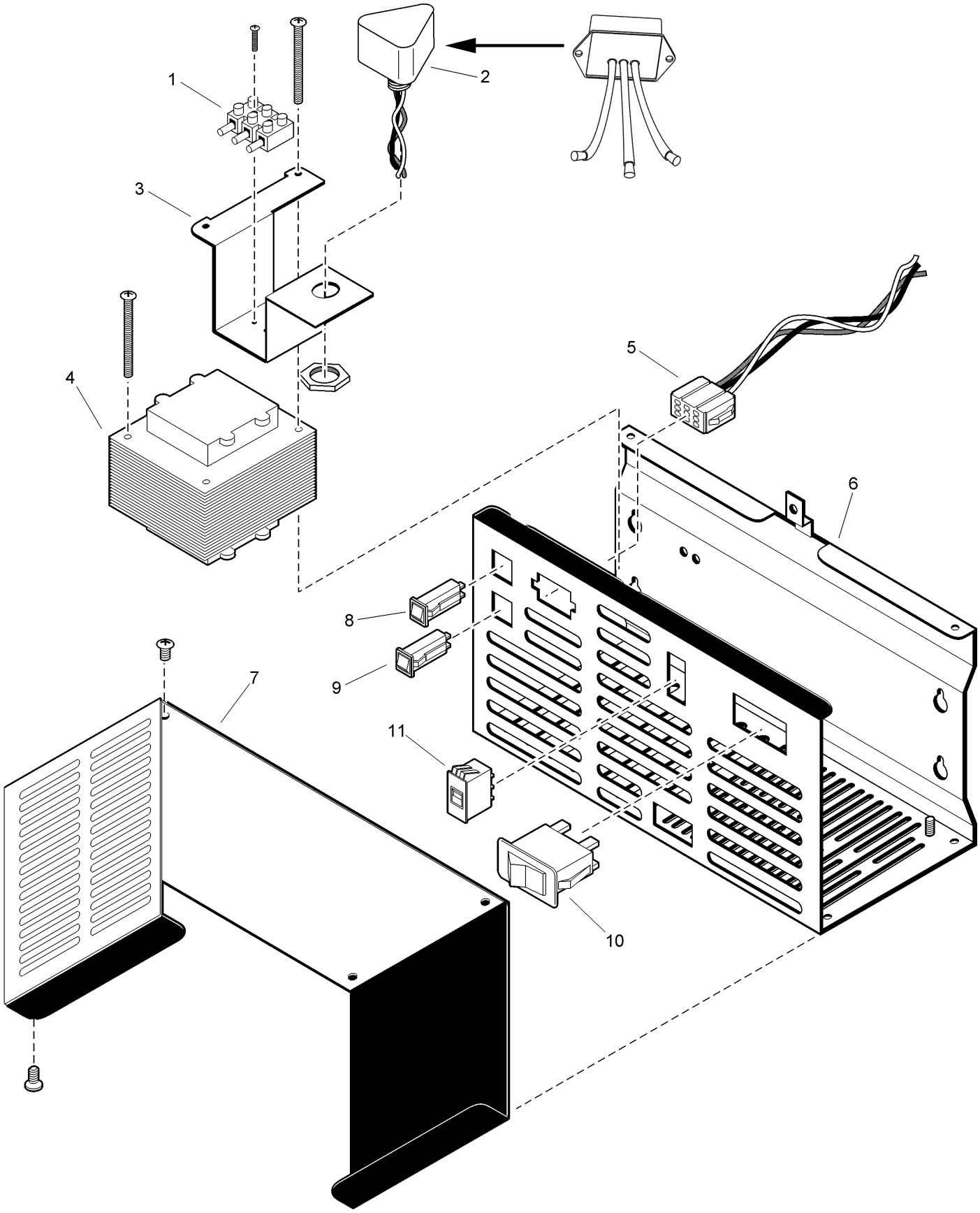

Network LTC Sat. 2.0, Network DR2 PS Assy (3 of 3) (continued)

Ref.	Part Number	Qty.	Description
1	363-3215	1	Terminal Block, Plug, 3-Position
2	118-0589SK	1	Surge Protector (Replaces Older Model)
3		1	Bracket, Surge ▲
4	89-7334	1	Transformer Assembly, Ltc 2.0
4	89-7767	1	Transformer Assembly, Dr2
5		1	Socket, 9-Pin ▲
6		1	Case, Power Supply ▲
7		1	Cover, Power Supply ▲
8	363-3467	1	Circuit Breaker, 2.0 Amp
9	363-5270	1	Circuit Breaker, 4.0 Amp
10	363-3361	1	Switch, Circuit Breaker, 1.5A
11	102-0648	1	Slide Switch 115/230V A.C. Selection (Ltc Only)
	89-7702		Power Supply Assy., Svc,. Ltc 2.0 (Includes Items 1-11) ● ■
	89-7766		Power Supply Assy., Svc., Network Dr2 (Early Production Models) (Includes Items 1-10) ● ■

● SERVICE ITEMS
▲ Not serviced separately
■ Not illustrated

Network LTC Satellite 2.0 - Plastic Cabinet (2 of 3)

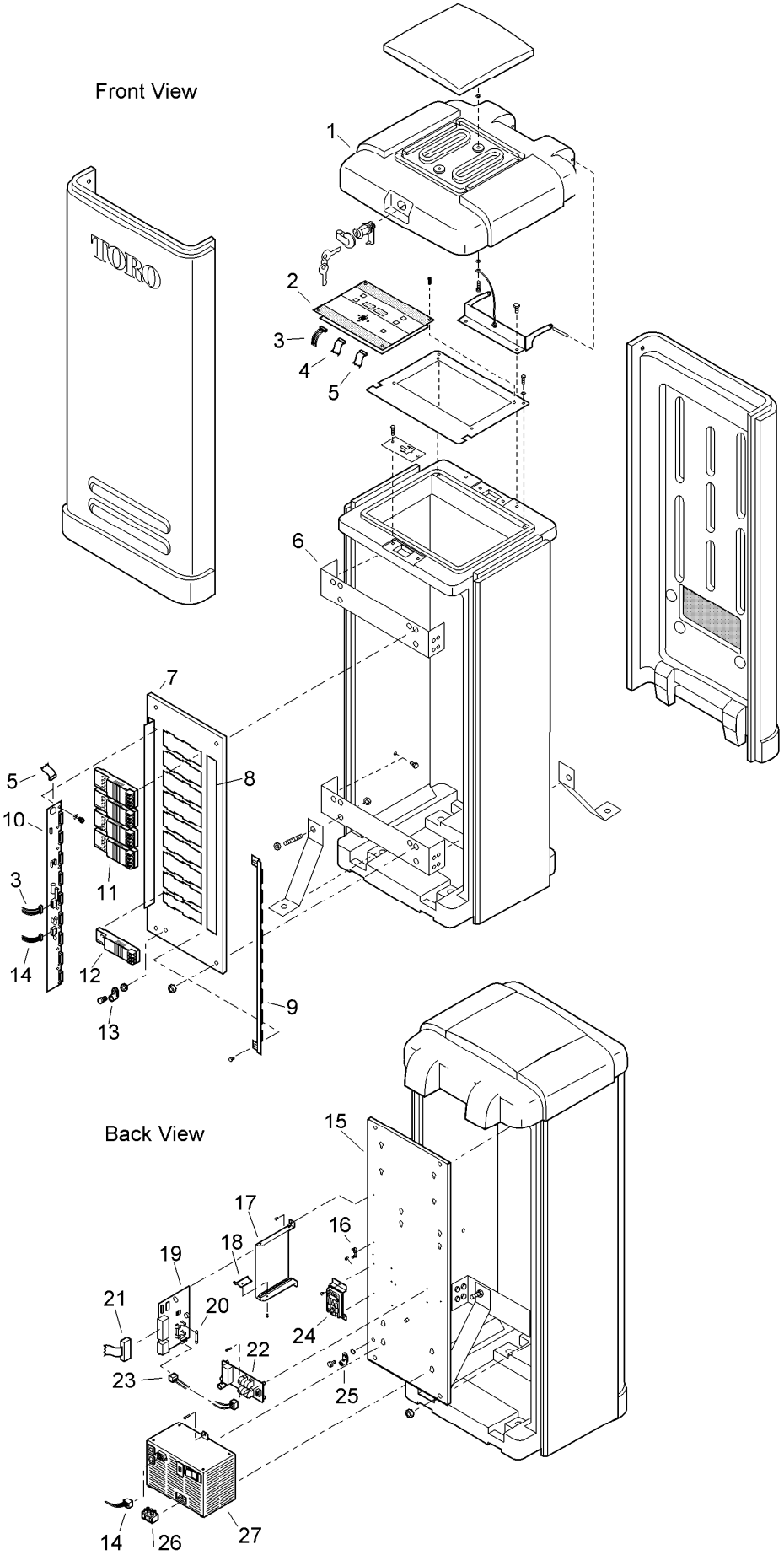

Network LTC Satellite 2.0 - Plastic Cabinet (2 of 3) (continued)

Ref.	Part Number	Qty.	Description
1		1	Satellite Plastic Pedestal & Components (See Satellite Plastic Pedestal And Components Section) ▲
2	89-7708	1	Timing Mechanism Assy., Ltc 2.0
3	89-7707	1	Cable Assy., Power To Tm
4	35-6328	1	Cable Assy., Modem
5	89-7057	1	Cable Assy., Output Module
6		2	Bracket ▲
7	89-6730	1	Back Plate, Module
8	35-6394	1	Label, Station
9	89-7394	1	Lock, Module
10	89-7710	1	Back Plane Pcb Assy.
11	MOD-S4		Module Assy., Output ◆
12	89-7711	1	Module Assy., Pump
13	363-1553	1	Lug, Grounding
14	89-7335	1	Cable Assy., Power Supply
15	89-6944	1	Back Plate, Power Supply
16	35-7288	1	Clip, Ground
17	35-8570	1	Bracket, Modem
18	35-8704	1	Bracket, Retainer, Lower
19	89-7852	1	Modem Assy., Standard, Service
20	102-3819	2	Fuse, 0.75 Amp (10-Pack)
21	35-6328	1	Cable Assy., Modem
22	91-1307	1	Pcb Assy., Surge Protection, Communication
23	91-1405	1	Cable Assy., Comm.
24	35-8833	1	Bracket Assembly, Com Cable
25	363-1553	1	Lug, Grounding
26	363-3216	1	Terminal Block, Socket
27		1	Power Supply Assy. (See Power Supply Assembly Section) ▲
	363-2200		Battery, 3.9 Volt, Lithium ■ ●
	89-7172		Eprom Rev. 2.5 ■ ●
	89-8118		2.5 Upgrade Kit (Includes Eprom, Installation Instructions, And Faceplate Decal) ◆ ■ ●

● SERVICE ITEMS
▲ Not serviced separately
◆ Order Through Finished Goods Distribution System - Minneapolis
■ Not illustrated

Network LTC Plus Sat. - Internal Components

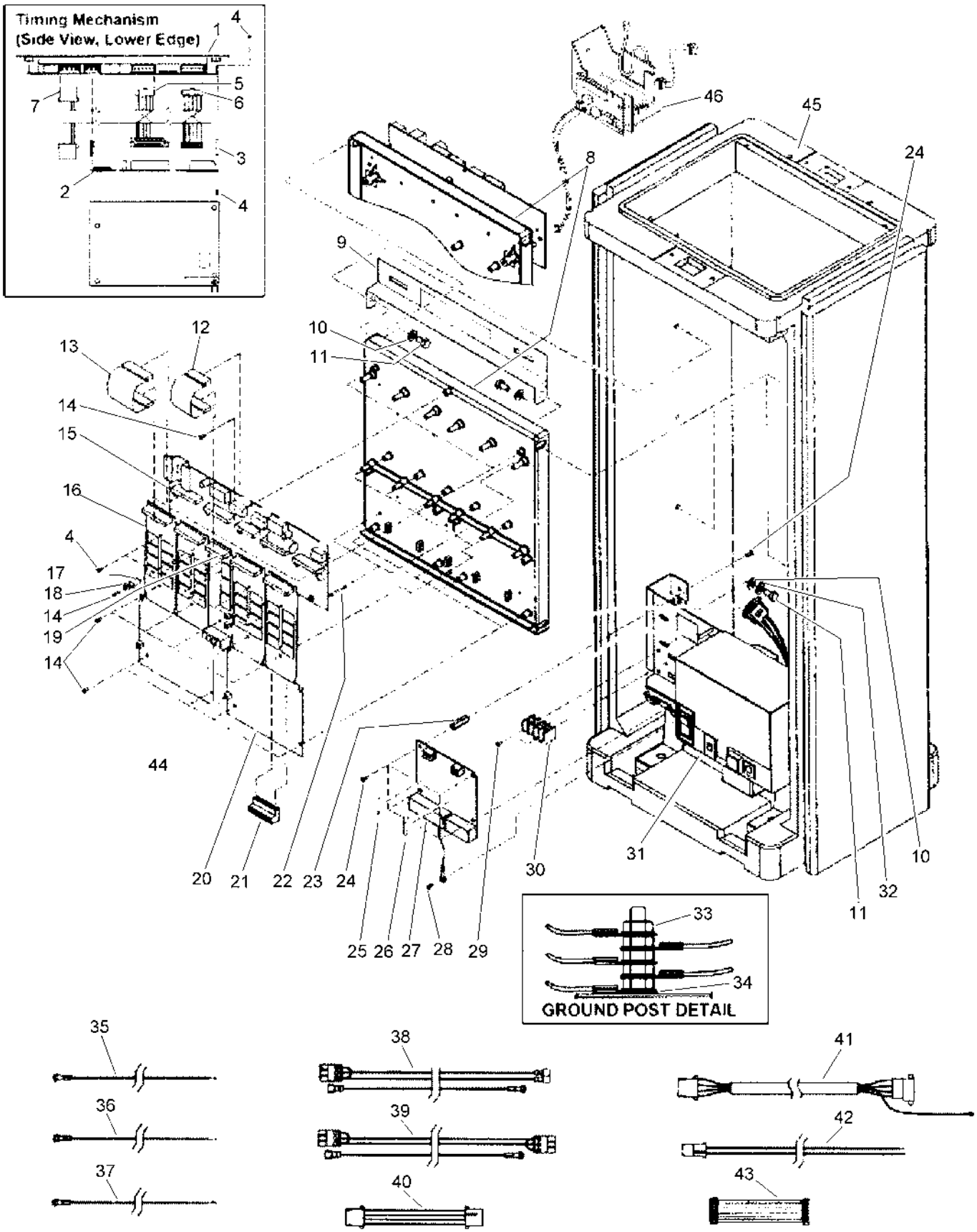

Network LTC Plus Sat. - Internal Components (continued)

Ref.	Part Number	Qty.	Description
1	102-0794	1	Timing Mechanism Assembly (Includes Items 1, 3, 4 & 6) ●
2	89-9026	1	Modem, Standard (Includes Items 2-5) ●
3		4	Standoff, Hex 1/4" X 1.5" ▲
4	1-3078	4	Screw, Machine, #6-32 X 1/4"
5	89-9043	1	Cable Assy., Ribbon, Timing Mechanism To Modem
6	89-9042	1	Cable Assy., Ribbon, Timing Mechanism To Distribution Board
7	89-9041	1	Cable Assy., 2-Wire, Timing Mechanism Power
8	89-9027	2	Frame, Black Plastic Assy. (Includes Item 22)
9		1	Bracket, Reinforce (Plastic Cabinet Models Only) ▲
10	360-0140	4	Washer-Flat
11	360-0595	8	Screw, Machine, 1/4-20 X 1/2"
12	102-0803	1	Cable Assy., Ribbon, 12-Pin (Pump/Common To Distribution)
13	102-0802	4	Cable Assy., Ribbon, 16-Pin (8-Station Output To Distribution)
14	363-1355		Screw, Tap, #6 ◆
15	102-0793	1	Parallel Distribution Board (Includes Item 14) ●
16	102-0796	1	Output Module, 8-Station Svc. (Includes Items 4, 13, & 14) ◆ ● ❑
17		2	Retainer ▲
18	363-5083	2	Washer, Brass
19	102-0795	1	Pump/Com Module Svc. (Includes Items 12, 14, 17, 18, & 19) ● ❑
20			16-Station Output Board (See Services Items 89-9033 To 89-9039) ▲
21	89-9032		Connector, Terminal Block, 8-Station ◆
22	363-3587	2	Screw, Tap, #8 X 1.5"
23	363-3603	4	Standoff, Hex, 5/16" X 1"
24	360-0285	8	Screw, Machine, 6-32 X 3/8
25	363-2638	4	Fuse, 0.5 Amp, 250V ●
26	363-2635	4	Fuse, 7.5 Amp, 250V ●
27	118-1448SK	1	Pump/Common/Communication Surge Board (Includes Items 23, 24, & 27) ❑ ●
28	360-0136	1	Screw, Tap, #8
29	4-1063	2	Screw, Tap, #6
30	363-3574	1	Terminal Block, 2-Position
31	102-0645	1	Power Supply Assy. (See Power Supply Assembly.)
32	363-1623	4	Washer, Lock
33		5	Hex Nut, #8-32 W/External Tooth Lock Washer ▲
34	360-0600	1	Washer, Lock, Ext T
35			Wire Assy., Ground, 14 Awg X 8" (See Service Item 89-9049) ▲
36		1	Wire Assy., Ground, 14 Awg X 10.5" (See Service Item 89-9049) ▲
37		1	Wire Assy., Ground, 14 Awg X 13" (See Service Item 89-9049) ▲
38		1	Cable Assy., Modem To Terminal Block (See Service Item 89-9044) ▲
39		1	Cable Assy., Modem To Surge Board (See Service Item 89-9044) ▲
40	89-9045	1	Cable Assy., 4-Wire Jumper
41	89-9046	1	Cable Assy., 4-Wire, Shielded
42	89-9047	1	Cable Assy., 2-Wire, Pump/Com Board To Surge Board
43	89-9048	1	Cable Assy., Ribbon, Jumper
44	102-5940SK		Kit, Station Labels, Numbered, Plastic ◆
45		1	Satellite Plastic Pedestal (See Satellite Plastic Pedestal Section) ▲
46		1	Radio Assembly (See Network Ltc Plus Radio Assembly Section) ▲
	89-9027		Frame, Black Plastic Assy. (Includes Item 22) ● ■
	89-9033		16-Station Output Board W/O Surge Pills Or Switches (Includes Item 14) ❑ ● ■
	89-9034		16-Station Output Board W/Switches (Includes Item 14) ❑ ● ■
	89-9035		16-Station Output Board W/Surge Pills (Includes Item 14) ❑ ● ■
	89-9036		16-Station Output Board W/Surge Pills Or Switches (Includes Item 14) ❑ ● ■
	89-9044		Cable Assy. Svc., Surge To Modem & Surge To Terminal Block (Includes Items 37 & 38) ● ■

● SERVICE ITEMS
▲ Not serviced separately
❑ Order Through Finished Goods Distribution System - Minneapolis
■ Not illustrated
◆ Quantity Varies With Model

Network LTC Plus Sat. - Internal Components (continued)

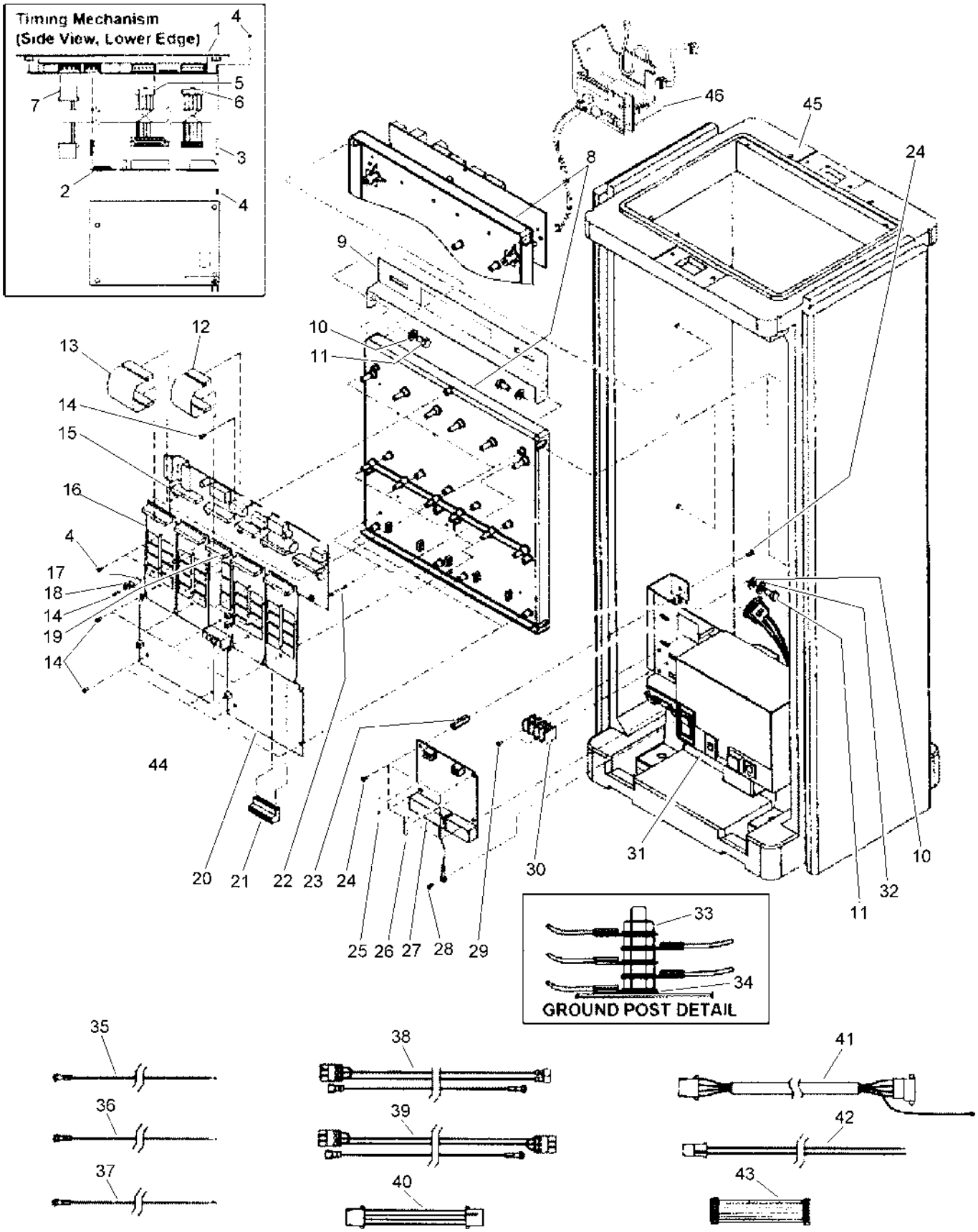

● SERVICE ITEMS
▲ Not serviced separately
❑ Order Through Finished Goods Distribution System - Minneapolis
■ Not illustrated
◆ Quantity Varies With Model

Network LTC Plus Satellite 4.0, Metal Cabinet

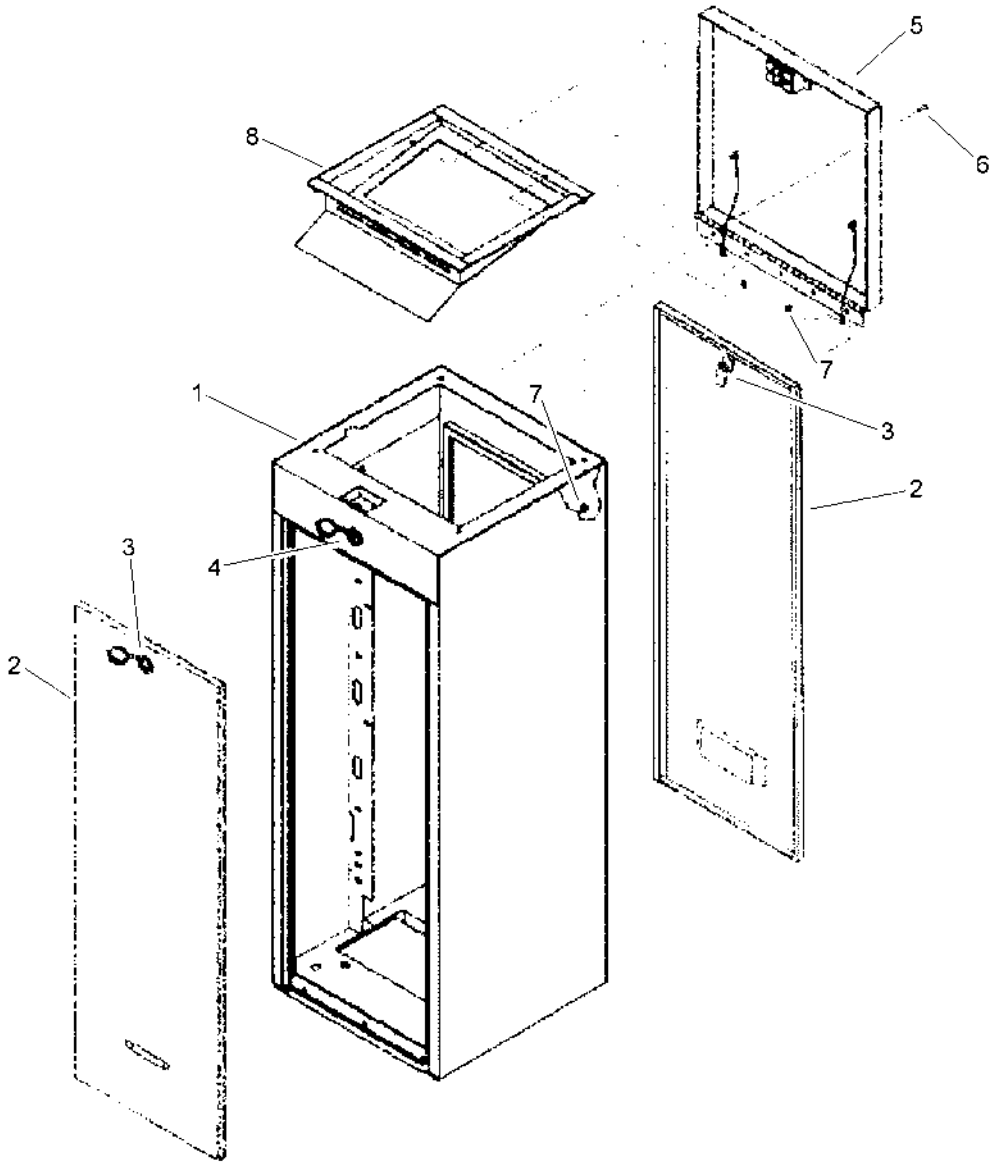

Network LTC Plus Satellite 4.0, Metal Cabinet (continued)

Ref.	Part Number	Qty.	Description
1	102-0702	1	Base, Pedestal Green, Sst W/Lock Assy, Svc. (Includes Item 4, Cover & Keys) ●
2	102-0704	2	Door, Pedestal, Green, Sst, Service (Includes Item 3, Lock Cover & Keys) ●
3	102-0714	2	Lock Kit, Door, And Keys, Service ●
4	102-0705	2	Lock Kit, Cover And Keys, Service ●
5	102-0703	1	Cover, Pedestal Green, Sst
6	363-3438	5	Screw, #10-32 X 3/4", Sst
7	363-1752	4	Hex Nut, #10-32, Sst
8	102-0684	1	Mount, Timing Mechanism, Sst
	360-0565		Keys, Two W/ Ring (Golf #1382) ● ■
	89-8294		Pedestal Assy., Green, Sst, Service (Includes Items 1-7) ● ■

● SERVICE ITEMS

■ Not illustrated

N. LTC Plus, Power Supply, Early Model

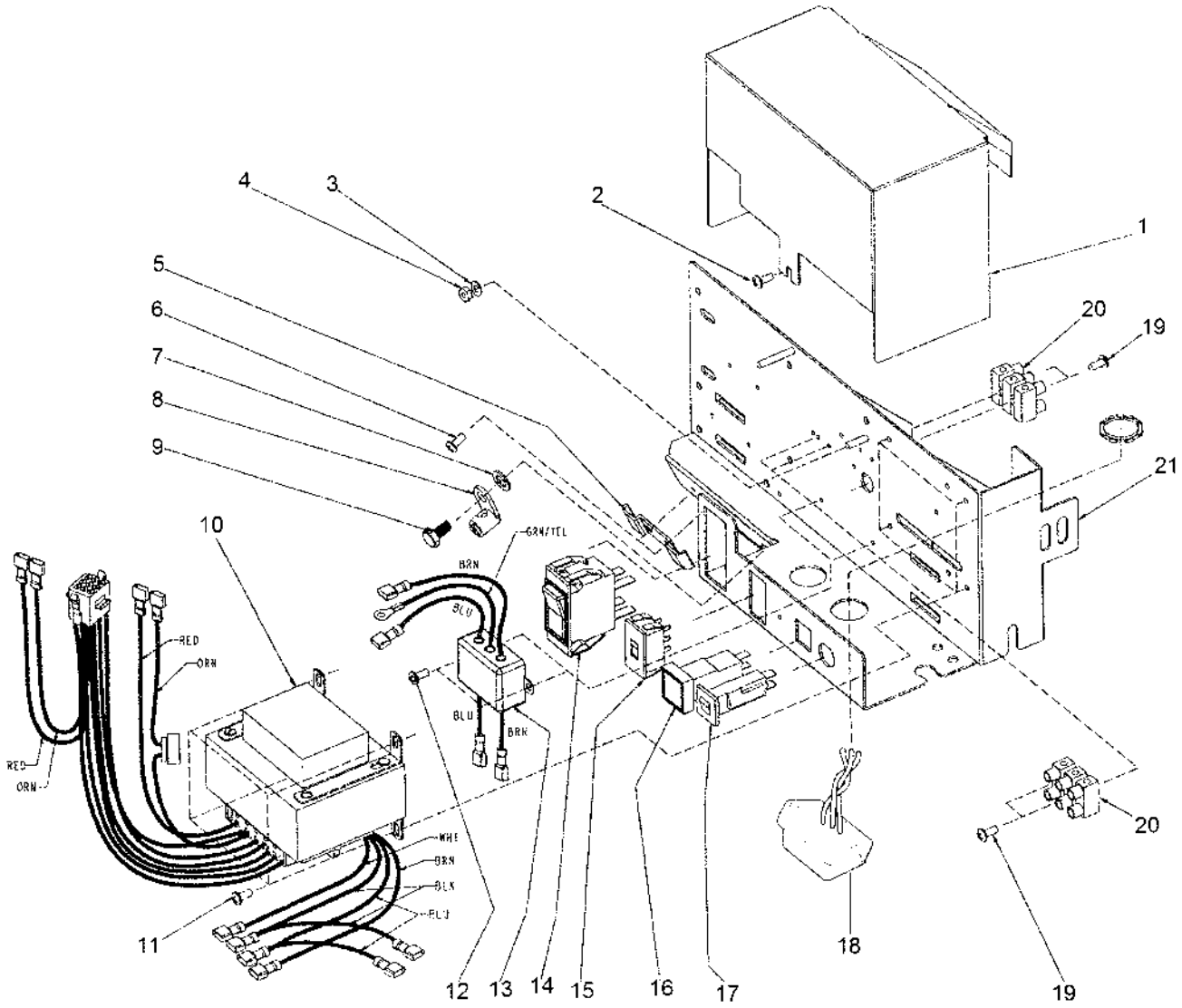

N. LTC Plus, Power Supply, Early Model (continued)

Ref.	Part Number	Qty.	Description
1	102-0800	1	Cover, Power Supply, Svc. ●
2	360-0136	1	Screw, Tap, #8
3	360-0600	1	Washer, Lock, Ext T
4		1	Nut, Hex, #8-32 ▲
5		1	Clamp, Com Cable ▲
6	1-6051	1	Screw
7	363-1623	1	Washer, Lock
8	363-1553	1	Lug, Grounding
9	360-0595	1	Screw, Machine, 1/4-20 X 1/2"
10	102-0791	1	Transformer W/Wire Harness Assy., Svc. ●
11		4	Screw, Tap, #10 X 3/8" ▲
12	4-1063	2	Screw, Tap, #6
13	102-0700	1	Filter Assy., Rfi
14	102-0666	1	On/Off Switch
15	102-0648	1	Slide Switch 115/230V
16	102-0788	1	3.2A Fuse Holder Assy.
17	102-0651	1	Circuit Breaker, 4.0 Amp
18	118-0538SK	1	Ttf Surge Protector
19	360-0297	4	Screw, #6 X 3/4"
20	102-0792	2	Terminal Block, 3-Position, Svc. (Includes Item 19) ●
21	102-0801	1	Plate, Transformer Mounting, Svc. ●
	102-0650	10	Fuse, 3.2 Amp, Slow-Blow (10-Pack) ●■
	89-9037	1	Power Supply Assembly, W/O Surge (Includes 1-17 And 19-21) ■●
	89-9038	1	Power Supply Assembly, W/ Surge (Includes 1-21) ■●

● SERVICE ITEMS
▲ Not serviced separately
■ Not illustrated

Power Supply, N. LTC Plus and E-Series OSMAC

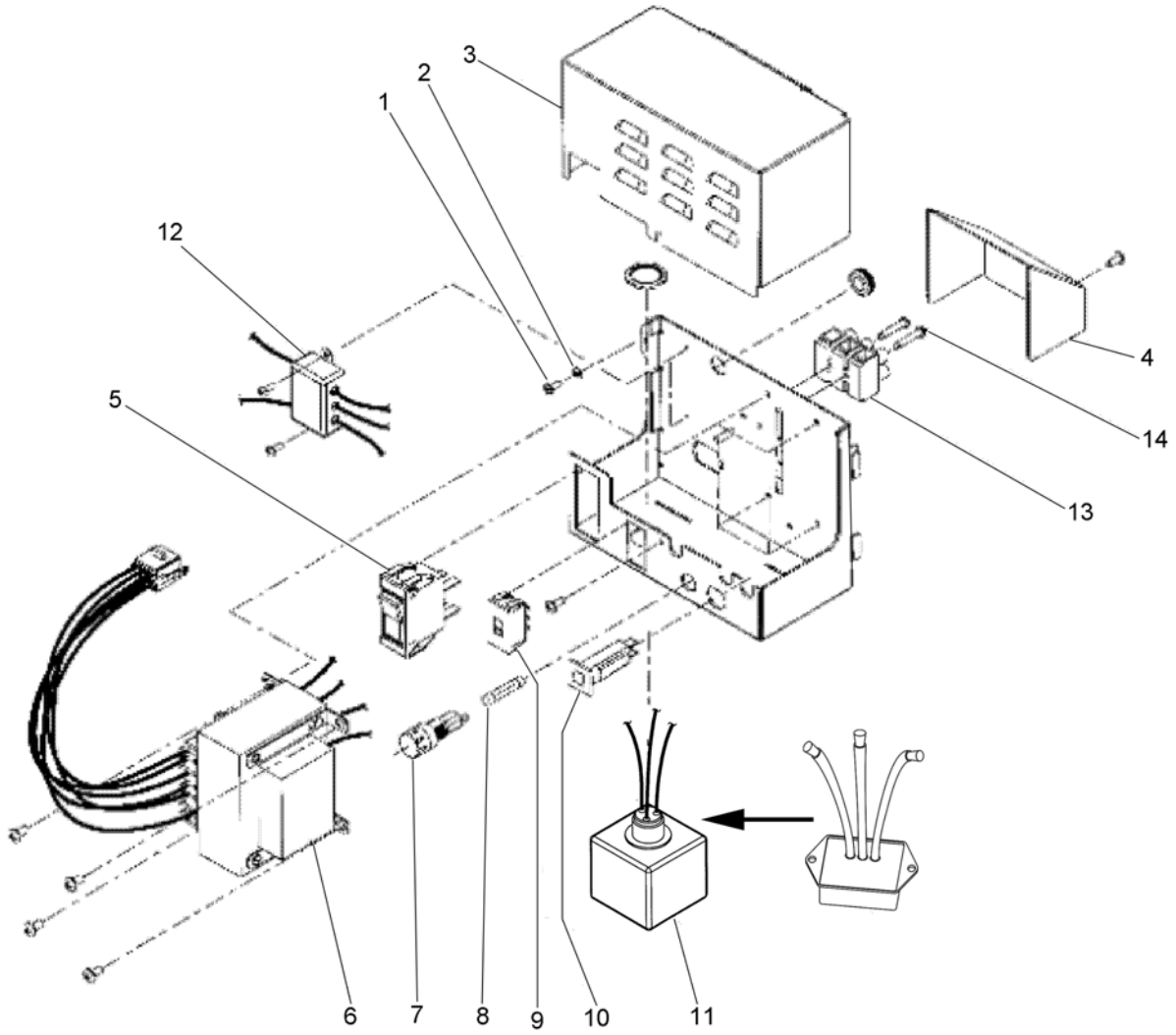

Power Supply, N. LTC Plus and E-Series OSMAC (continued)

Ref.	Part Number	Qty.	Description
1	4-1063	2	Screw, Tap, #6
2		2	Washer, Lock, #6 ▲
3	102-0646	1	Cover, Power Supply
4	102-0695	1	Cover, Wire Terminal
5	102-0666	1	On/Off Switch
6	102-0647	1	Transformer Assy., Svc. ●
7	102-0649	1	Fuse Holder W/Cap
8	102-0650	1	Fuse, 3.2 Amp, Slow-Blow (10-Pack) ●
9	102-0648	1	Slide Switch 115/230V
10	102-0651	1	Circuit Breaker, 4.0 Amp
11	118-0538SK	1	Ttf Surge Protector
12	102-0700	1	Filter Assy., Rfi
13	102-0667	1	Terminal Block, 115/230V (Includes Item 14)
14	360-0297	2	Screw, #6 X 3/4"
	102-0645	1	Power Supply Assembly (Includes Items 1-14) ■

● SERVICE ITEMS
▲ Not serviced separately
■ Not illustrated

Network LTC Plus Radio Assembly

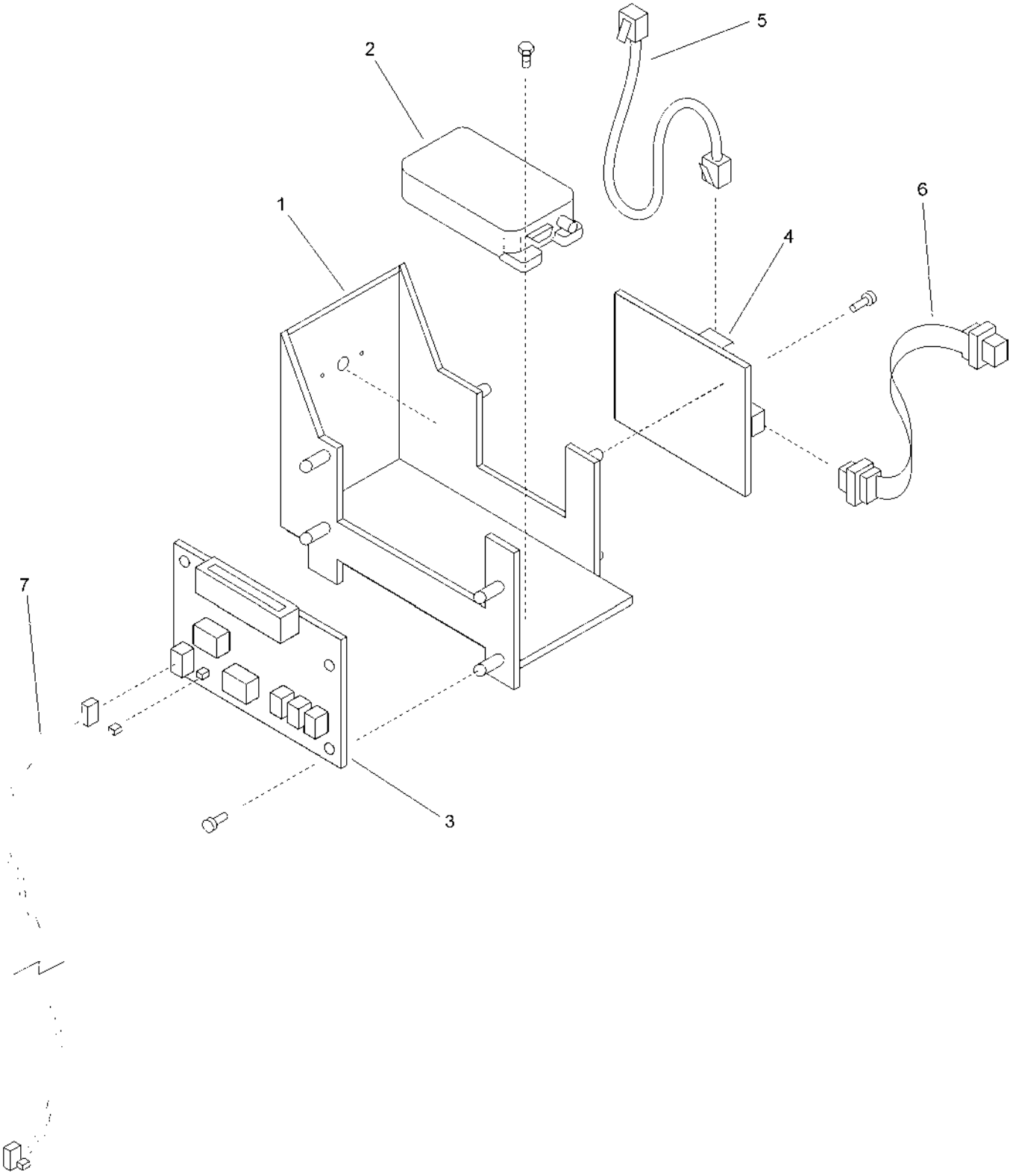

Network LTC Plus Radio Assembly (continued)

Ref.	Part Number	Qty.	Description
1		1	Bracket, Radio Assy. (Uhf Models Only) ●
2	363-4638SK	1	Maxon Radio (Uhf Models Only)(See Service Item 363-4638)
3	89-7701	1	Universal Modem (Uhf Models Only) ■
4	102-3125SK	1	Radio Interface Board (Uhf Models Only) ■
5	363-3619SK	1	Rj-45 Cable Assy. (Uhf Models Only) ■
6	102-3257SK	1	Db-9 Cable Assy. (Uhf Models Only) ■
7		1	Cable Assy., Modem To Surge Board (Uhf Models Only) ●

● Not serviced separately
■ Order Through Finished Goods Distribution System - Minneapolis

E-Series OSMAC Sat., Narrow, Plastic Cab. (1 Of 3)

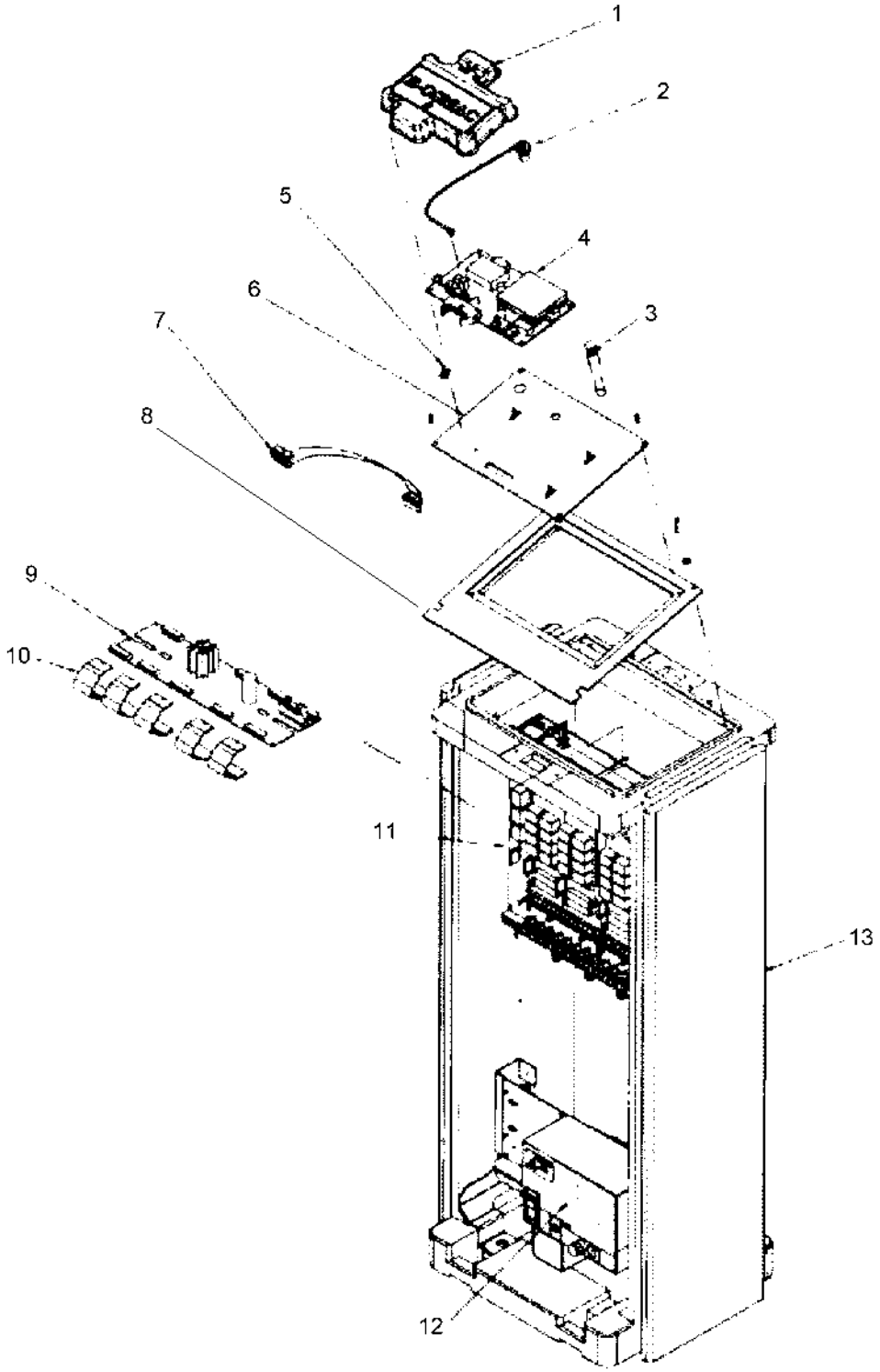

E-Series OSMAC Sat., Narrow, Plastic Cab. (1 Of 3) (continued)

Ref.	Part Number	Qty.	Description
1	102-2624	1	Cover, Decoder Pcb
2	102-1204	1	Cable, Antenna, External, Narrow-Band Decoder
3	102-0655		Antenna, 450-475 Mhz, W/Bnc Connector ▲
4	102-1202	1	Narrow-Band Decoder Module For Plastic Cabinet ▲
5	363-3946	4	Standoff, Plastic, Locking
6	102-0661	1	Faceplate, Decoder Mounting
7	102-0659	1	Ribbon Cable ▲
8	102-0664	1	Mounting Plate, Tm
9	102-0672	1	Output Distribution Module Assy. ▲
10	102-0670		Ribbon Cable, Distribution To Output, 4" Length ▲■
11			Field Interface Components (See Field Interface Components Section) ●
12	102-0645	1	Power Supply Assy. (See Power Supply Assembly, Network Ltc Plus Sat. And E-Series Osmac Section)
13		1	Plastic Satellite Pedestal (See Plastic Satellite Pedestal Section For Details) ●

● Not serviced separately
▲ Order Through Finished Goods Distribution System - Minneapolis
■ Quantity Varies With Model

E-Series OSMAC Sat., Narrow, Metal Cab. (2 of 3)

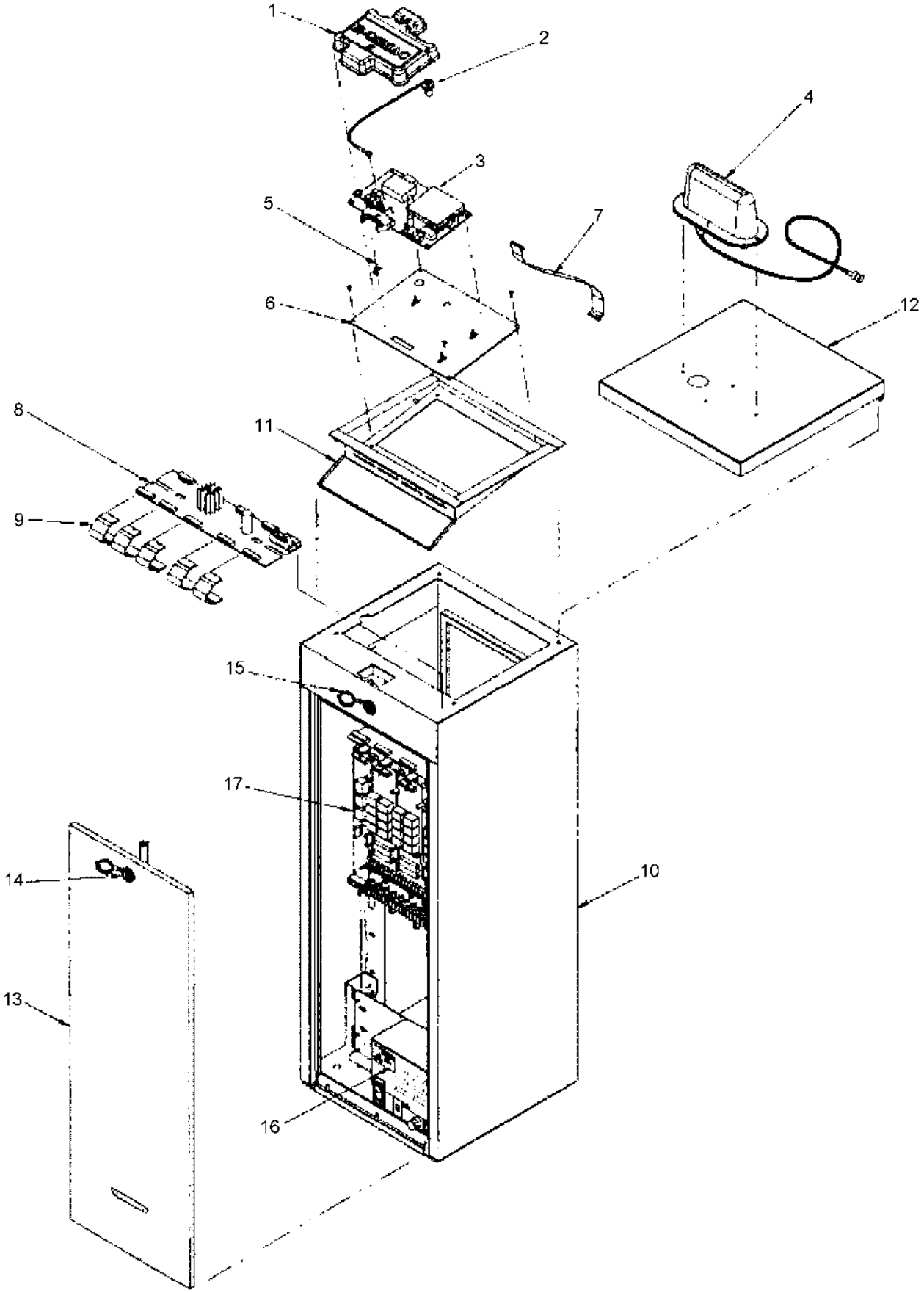

E-Series OSMAC Sat., Narrow, Metal Cab. (2 of 3) (continued)

Ref.	Part Number	Qty.	Description
1	102-0662	1	Cover, Decoder Module Assy.
2	102-0574	1	Antenna, Cable, External, Narrow-Band
3	102-1203	1	Narrow-Band Decoder Module For Metal Cabinet ❑
4	102-0663	1	Uhf Dome Style Antenna Assy., 450-475 Mhz, Service, W/Cable
5	363-3946	4	Standoff, Plastic, Locking
6	102-0661	1	Faceplate, Decoder Mounting
7	102-0659	1	Ribbon Cable
8	102-0672	1	Output Distribution Module Assy. ❑
9	102-0670		Ribbon Cable, Distribution To Output, 4" Length ◆
10		1	Base, Pedestal, Sst W/Lock Assy. (See Service Item 102-0702) ▲
11		1	Mounting Plate, Tm (See Service Item 102-0684) ▲
12		1	Lid Assy., Pedestal, Sst (See Service Item 102-0703) ▲
13		2	Door, Pedestal, Sst, W/Lock Assy. (See Service Item 102-0704) ▲
14		2	Lock Assy., Door (See Service Item 102-0714) ▲
15		1	Lock Assy., Pedestal Base (See Service Item 102-0705) ▲
16	102-0645	1	Power Supply Assy.
17			Field Interface Components (See E-Series Osmac Satellite, Narrow-Band, Field Interface Components) ▲
	102-0684	1	Mount, Timing Mechanism, Sst (Includes Item 11) ●■
	102-0714	1	Lock Kit, Door, Service (Includes Item 14) ●■
	102-0705	1	Lock Kit, Cover, Service (Includes Item 15) ●■
	102-0702	1	Base, Pedestal Green, Sst W/Lock Assy, Svc. (Includes Items 10 & 15) ●■
	102-0696	1	Pedestal Assy., Service (Includes Items 10-15) ●■
	102-0703	1	Cover, Pedestal Green, Sst (Includes Item 12) ●■
	102-0704	1	Door, Pedestal, Green, Sst, Service (Includes Item 14) ●■

● SERVICE ITEMS
▲ Not serviced separately
❑ Order Through Finished Goods Distribution System - Minneapolis
■ Not illustrated
◆ Quantity Varies With Model

E-Series OSMAC Sat., Narrow (3 Of 3)

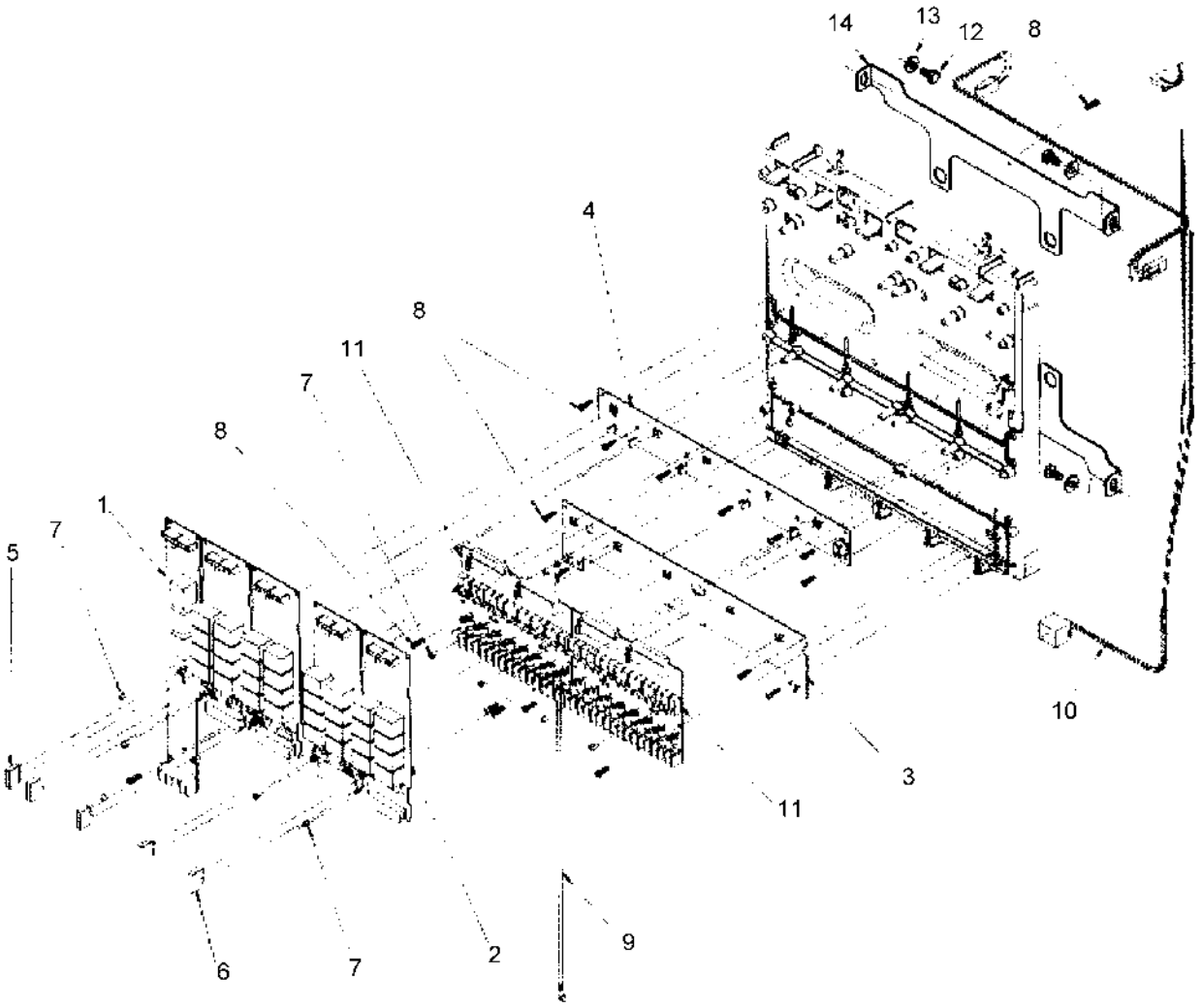

E-Series OSMAC Sat., Narrow (3 Of 3) (continued)

Ref.	Part Number	Qty.	Description
1	102-0669	1	Pump/Common Module Assy. (Includes Items 5, 7, And 102-0670 Ribbon Cable) ◆
2	102-0654		Output Module Assy., 8-Station (Includes Items 6, 7, And 102-0670 Ribbon Cable) ◆▲
3	102-0652	1	Ground Bus Bar Pcb Assy., Service (Includes Item 8)
4	102-0653	1	24 V A.C. Bus Bar Pcb Assy., Service (Includes Item 8)
5	102-0658	1	Fuse, 1.0 Amp, Fast-Blow, Service (5-Pack)
6	102-0657	4	Fuse, 3.0 Amp, Fast-Blow, Service (5-Pack)
7	102-0671	11	Screw, Machine, 6-32 X 1/4"
8	363-1355	20	Screw, Tap, #6
9	102-0685	1	Wire Harness Assy., Grounding
10	102-0686	1	Wire Harness Assy., Power Supply

Ref.	Part Number	Qty.	Description
N/I	102-0638		8-Station Terminal Block (M0 Surge Level) ◆▲●
11	102-0639		16-Station Module Assy. (M1 Surge Upgrade) (Includes Items 7 & 8) ◆▲
11	102-0640		16-Station Module Assy. (M2 Surge Upgrade) (Includes Items 7 & 8) ◆▲
11	102-0641		16-Station Module Assy. (M3 Surge Upgrade) (Includes Items 7 & 8) ◆▲
11	102-0642		16-Station Module Assy. (M4 Surge Upgrade) (Includes Items 7 & 8) ◆▲
12	360-0595	4	Screw, Machine, 1/4-20 X 1/2"
13	360-0140	4	Washer-Flat
14		2	Bracket, Mount Backplate ■

● Not illustrated
▲ Quantity Varies With Model
◆ Order Through Finished Goods Distribution System - Minneapolis
■ Not serviced separately

E-Series OSMAC Sat., Wide, Plastic Cab. (1 of 3)

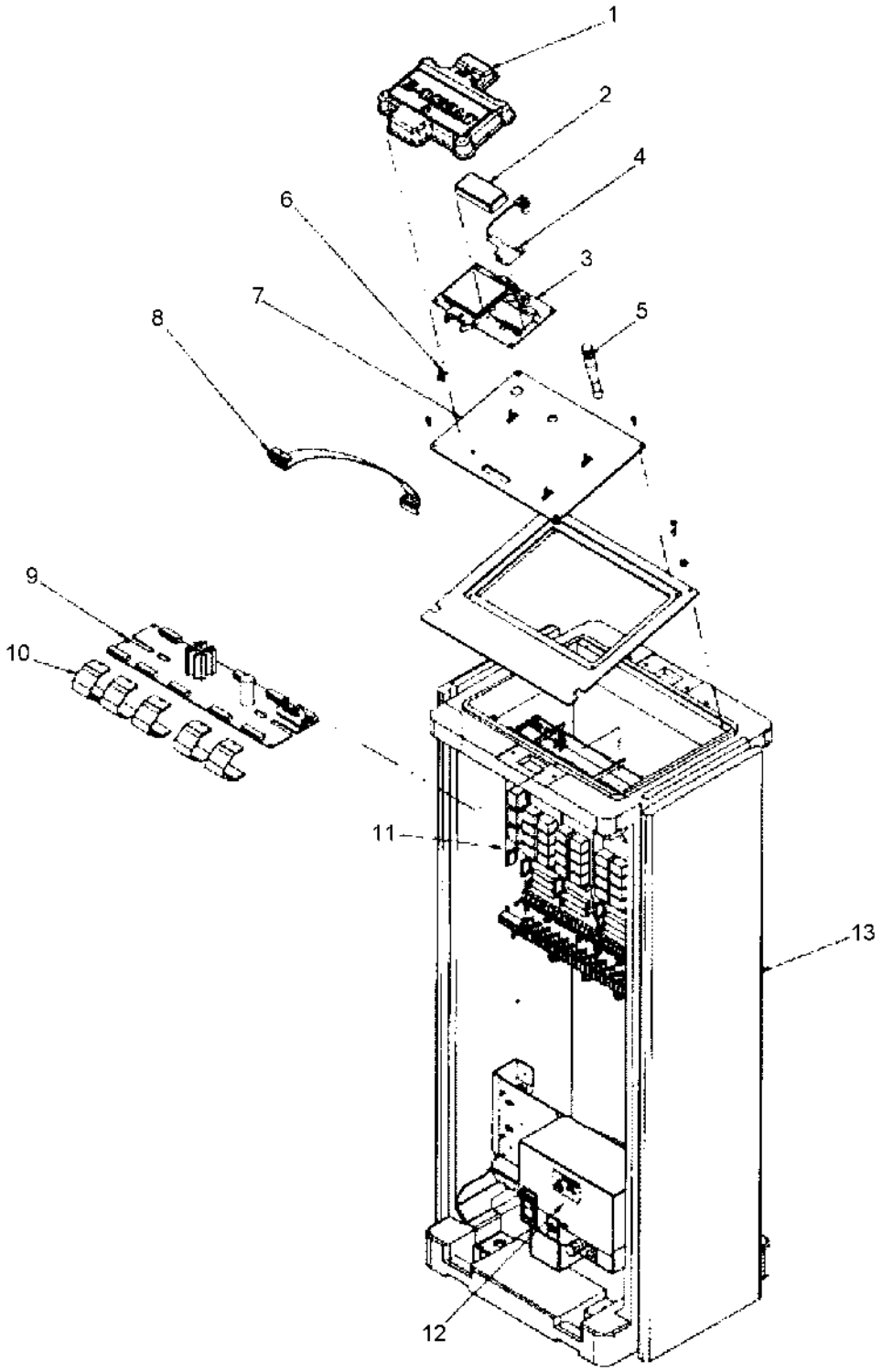

E-Series OSMAC Sat., Wide, Plastic Cab. (1 of 3) (continued)

Ref.	Part Number	Qty.	Description
1	102-2624	1	Cover, Decoder Pcb
2	N1551	1	Receiver Module ▲
3	102-0660	1	Receiver/Decoder Module Assy., Service (Includes Item 6) ▲
4	102-0656	1	Antenna Pcb Assy. (Optional) ▲
5	102-0655	1	Antenna, 450-475 Mhz, W/Bnc Connector (Optional) ▲
6	363-3946	4	Standoff, Plastic, Locking
7	102-0661	1	Faceplate, Decoder Mounting
8	102-0659	1	Ribbon Cable (Output Distribution Module To Decoder Module) ▲
9	102-0672	1	Output Distribution Module Assy. ▲
10	102-0670		Ribbon Cable, Distribution To Output, 4" Length ▲■
11			Field Interface Components (See Field Interface Components Section) ●
12	102-0645	1	Power Supply Assy.
13		1	Satellite Plastic Pedestal & Components (See Plastic Satellite Pedestal Section) ●

● Not serviced separately
▲ Order Through Finished Goods Distribution System - Minneapolis
■ Quantity Varies With Model

E-Series OSMAC Sat., Wide Metal Cab. (2 of 3)

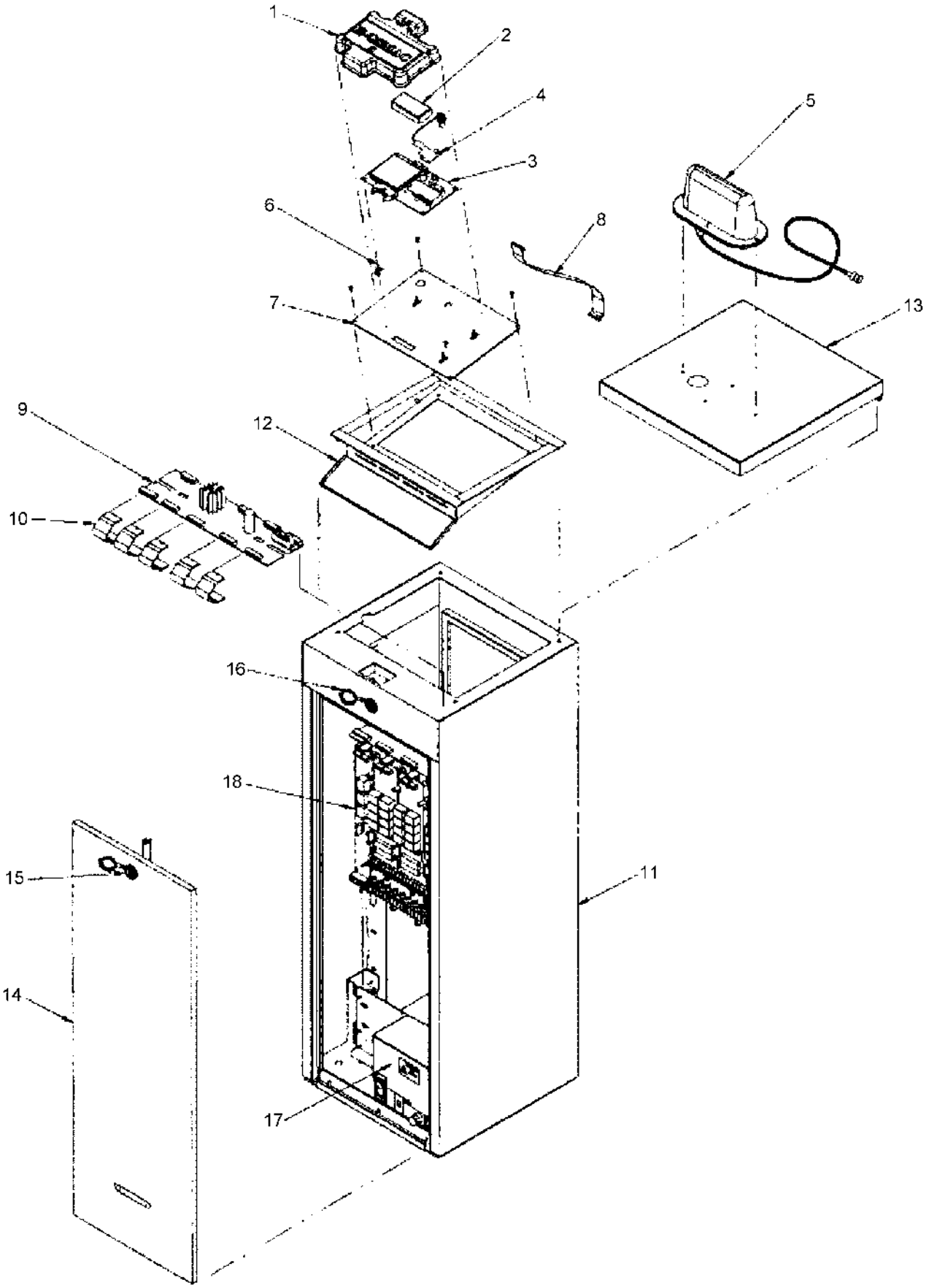

E-Series OSMAC Sat., Wide Metal Cab. (2 of 3) (continued)

Ref.	Part Number	Qty.	Description
1	102-2624	1	Cover, Decoder Module Assy., Service
2	N1551	1	Receiver Module ❑
3	102-0660	1	Receiver/Decoder Module Assy., Service (Includes Item 6) ❑
4	102-0656	1	Antenna Pcb Assy. ❑
5	102-0663	1	Uhf Dome Style Antenna Assy., 450-475 Mhz, Service, W/Cable
6	363-3946	4	Standoff, Plastic, Locking
7	102-0661	1	Faceplate, Decoder Mounting
8	102-0659	1	Ribbon Cable (Decoder Module To Distribution Module) ❑
9	102-0672	1	Distribution Board, Output, Parallel ❑
10	102-0670		Ribbon Cable (Distribution Board To Output Module) ❑ ◆
11	102-0702	1	Base, Pedestal Green, Sst W/Lock Assy, Service (Incudes Item 16) ●
12	102-0684	1	Mounting Plate, Tm, Service ●
13	102-0703	1	Lid Assy., Pedestal, Sst, Service ●
14	102-0704	2	Door, Pedestal, Green, Sst, W/ Lock Assy., Service (Includes Item 15) ●
15	102-0714	2	Lock Assy., Door, W/Keys & Cover, Service ●
16	102-0705	1	Lock Assy., Pedestal Base, W/Keys & Cover, Service ●
17	102-0645	1	Power Supply Assy.
18			Field Interface Components (See Field Interface Components Section) ▲
	102-0696		Pedestal Assy., Service (Includes Items 11-16) ■

● SERVICE ITEMS
▲ Not serviced separately
❑ Order Through Finished Goods Distribution System - Minneapolis
■ Not illustrated
◆ Quantity Varies With Model

E-Series OSMAC Sat., Wide (3 of 3)

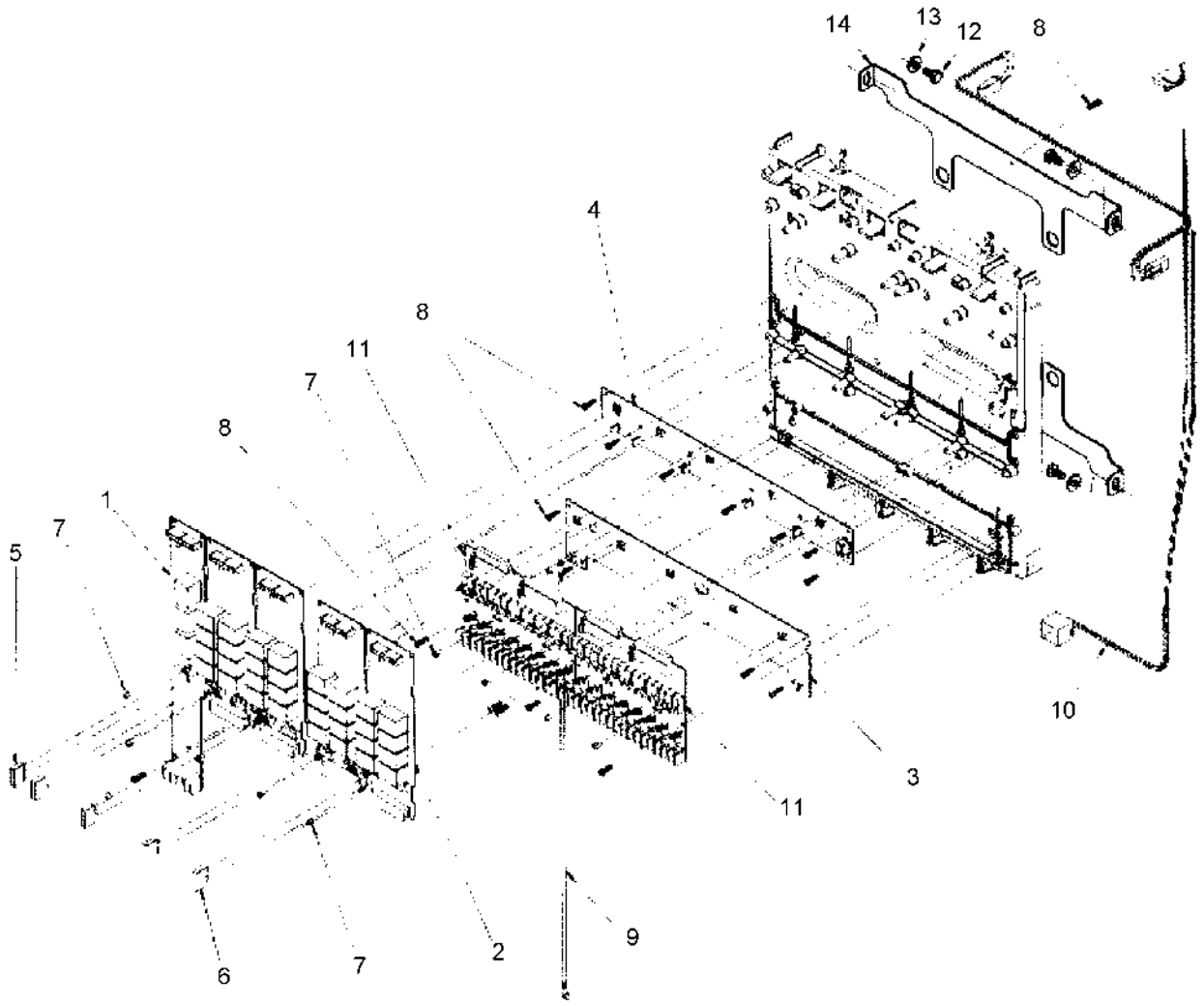

E-Series OSMAC Sat., Wide (3 of 3) (continued)

Ref.	Part Number	Qty.	Description
1	102-0669	1	Pump/Common Module Assy. (Includes Items 5, 7, And 102-0670 Ribbon Cable) ◆
2	102-0654		Output Module Assy., 8-Station (Includes Items 6, 7, And 102-0670 Ribbon Cable) ◆▲
3	102-0652	1	Ground Bus Bar Pcb Assy., Service (Includes Item 8)
4	102-0653	1	24 V A.C. Bus Bar Pcb Assy., Service (Includes Item 8)
5	102-0658	1	Fuse, 1.0 Amp, Fast-Blow, Service (5-Pack)
6	102-0657	4	Fuse, 3.0 Amp, Fast-Blow, Service (5-Pack)
7	102-0671	11	Screw, Machine, 6-32 X 1/4"
8	363-1355	20	Screw, Tap, #6
9	102-0685	1	Wire Harness Assy., Grounding
10	102-0686	1	Wire Harness Assy., Power Supply

Ref.	Part Number	Qty.	Description
N/I	102-0638		8-Station Terminal Block (M0 Surge Level) ◆▲●
11	102-0639		16-Station Module Assy. (M1 Surge Upgrade) (Includes Items 7 & 8) ◆▲
11	102-0640		16-Station Module Assy. (M2 Surge Upgrade) (Includes Items 7 & 8) ◆▲
11	102-0641		16-Station Module Assy. (M3 Surge Upgrade) (Includes Items 7 & 8) ◆▲
11	102-0642		16-Station Module Assy. (M4 Surge Upgrade) (Includes Items 7 & 8) ◆▲
12	360-0595	4	Screw, Machine, 1/4-20 X 1/2"
13	360-0140	4	Washer-Flat
14		2	Bracket, Mount Backplate ■●

● Not illustrated
▲ Quantity Varies With Model
◆ Order Through Finished Goods Distribution System - Minneapolis
■ Not serviced separately

Power Supply, N. LTC Plus and E-Series OSMAC

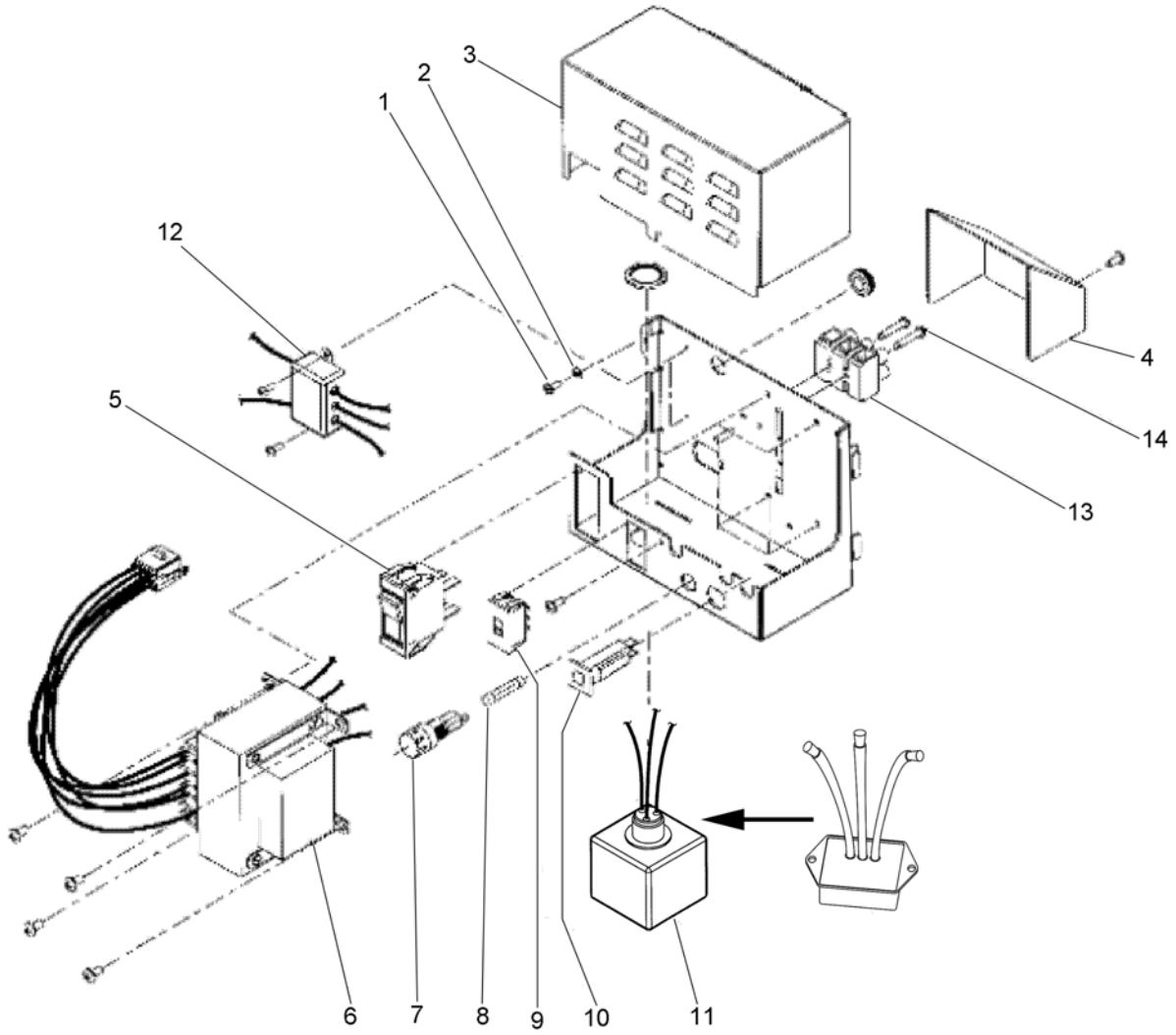

Power Supply, N. LTC Plus and E-Series OSMAC (continued)

Ref.	Part Number	Qty.	Description
1	4-1063	2	Screw, Tap, #6
2		2	Washer, Lock, #6 ▲
3	102-0646	1	Cover, Power Supply
4	102-0695	1	Cover, Wire Terminal
5	102-0666	1	On/Off Switch
6	102-0647	1	Transformer Assy., Svc. ●
7	102-0649	1	Fuse Holder W/Cap
8	102-0650	1	Fuse, 3.2 Amp, Slow-Blow (10-Pack) ●
9	102-0648	1	Slide Switch 115/230V
10	102-0651	1	Circuit Breaker, 4.0 Amp
11	118-0538SK	1	Ttf Surge Protector
12	102-0700	1	Filter Assy., Rfi
13	102-0667	1	Terminal Block, 115/230V (Includes Item 14)
14	360-0297	2	Screw, #6 X 3/4"
	102-0645	1	Power Supply Assembly (Includes Items 1-14) ■

● SERVICE ITEMS
▲ Not serviced separately
■ Not illustrated

OSMAC Satellite - 8 x 13 Metal Ped., Electric

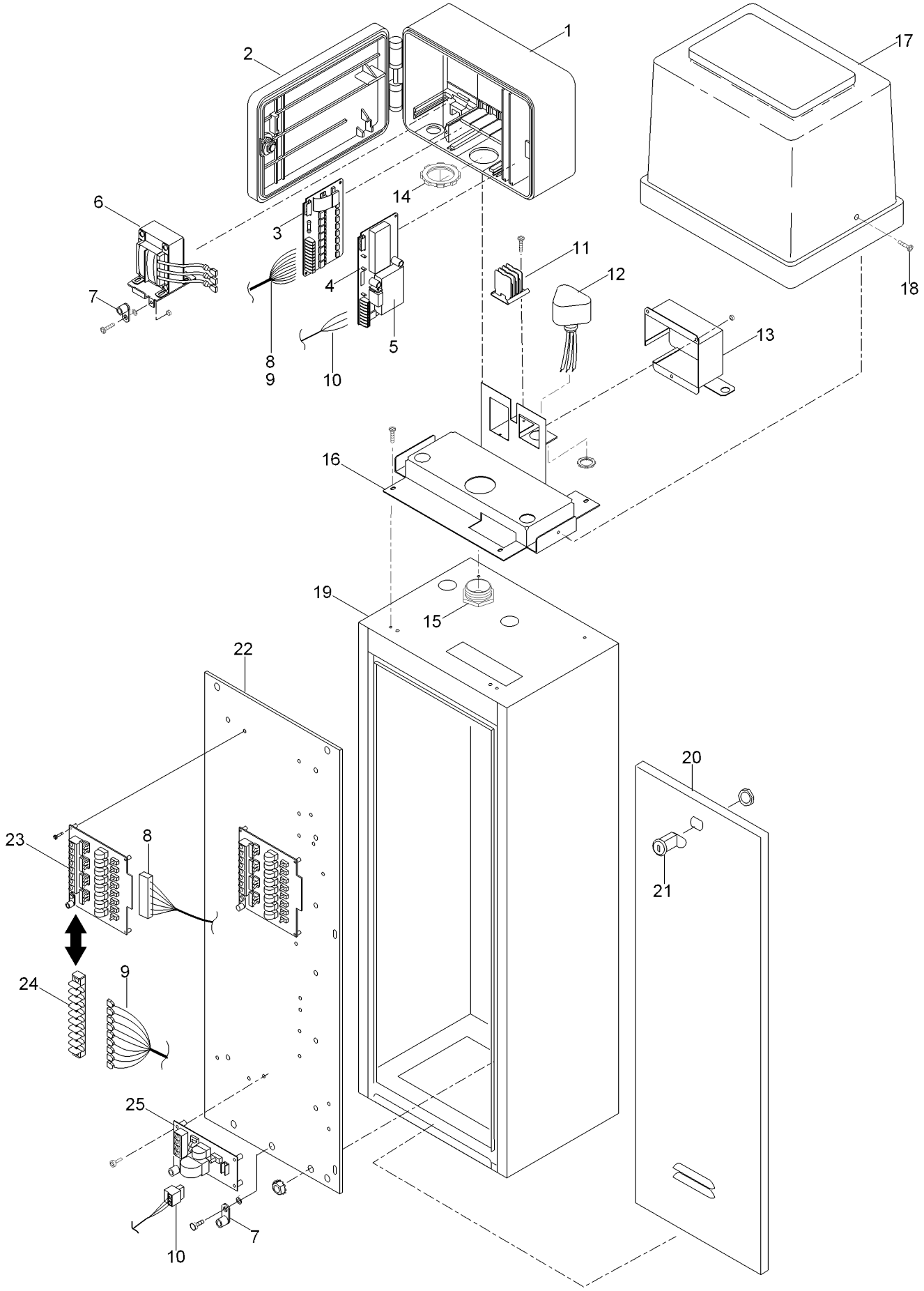

OSMAC Satellite - 8 x 13 Metal Ped., Electric (continued)

Ref.	Part Number	Qty.	Description
1		1	Housing, Cover, Rdr50 ●
2		1	Cover, Housing ●
3	NLN3491A	1	Output Pcb, 8-Station ▲
4	NLN3485	1	Decoder Module Rdr50 ▲
4	NLN3794	1	Decoder Module Rdr16 ▲
5	N1551-X	1	Receiver Module (See Finished Goods Price List For Specific Frequency) ▲
6	NPN8010	1	Transformer, 24 Vac ▲
7	363-1553	2	Lug, Grounding
8	91-1905		Cable Assy., Surge Protection, Short ■
8	91-1906		Cable Assy., Surge Protection, Medium ■
8	91-1907		Cable Assy., Surge Protection, Long ■
9	91-2151		Cable Assy., El, Short ■
9	91-2152		Cable Assy., El, Medium ■
9	91-2153		Cable Assy., El, Long ■
10	91-2433	1	Cable Assy., Pump/Common
11	363-2371	1	Terminal Block, 3-Position
12		1	Surge Protector, Osmac ●
13	91-1865	1	Cover, Safety, Ac
14		1	Locknut, 1.25" ●
15		1	Conduit Nipple, 1.25" ●
16	91-1884	1	Adapter, Osmac, 13" X 8.5", Sst
17	91-1860	1	Cover, Osmac
18	363-3438	2	Screw, #10-32 X 3/4", Sst
19	91-1508	1	Cabinet Assy., Sst (Includes Items 19-21)
20		2	Door ●
21	363-5369	2	Lock Assy., W/Keys
22	91-1441	2	Mounting Plate, Rear
23	91-1957		Pcb, Surge Protection, 8-Station ■
24	363-3313		Terminal Block, 9-Position ■
25	91-1305	1	Pcb Assy., Surge Protection, Pump/Com

● Not serviced separately
▲ Order Through Finished Goods Distribution System - Minneapolis
■ Quantity Varies With Model

OSMAC Satellite - 8 x 13 Metal Ped., Hydraulic

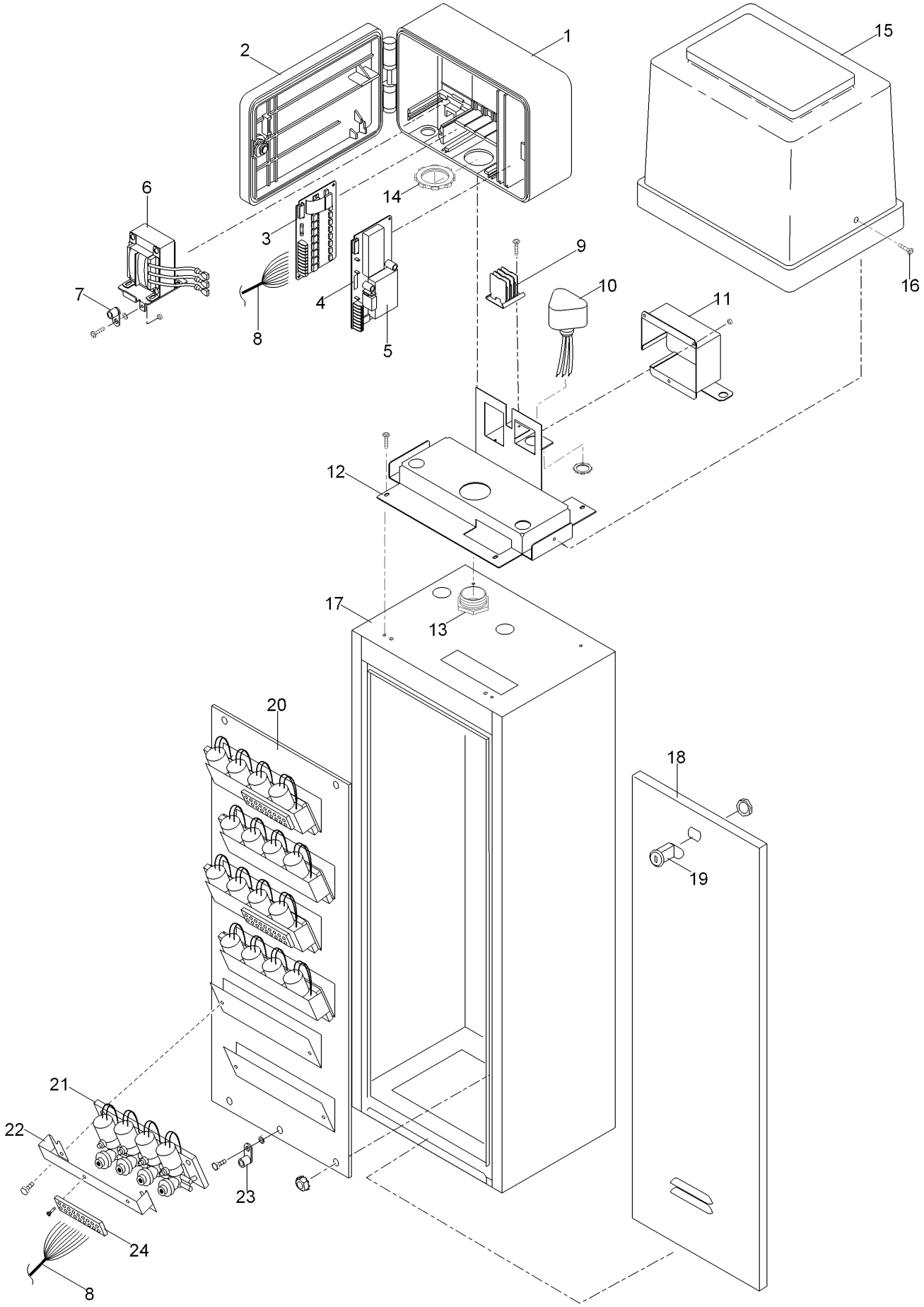

OSMAC Satellite - 8 x 13 Metal Ped., Hydraulic (continued)

Ref.	Part Number	Qty.	Description
1		1	Housing, Rdr50 ■
2		1	Cover, Housing ■
3	NLN3491A	1	Output Pcb, 8-Station ◆
4	NLN3485	1	Decoder Module Rdr50 ◆
4	NLN3794	1	Decoder Module Rdr16 ◆
5	N1551-X	1	Receiver Module (See Finished Goods Price List For Specific Frequency) ◆
6	NPN8010	1	Transformer, 24 Vac ◆
7	363-1553	2	Lug, Grounding
8	91-1899		Cable Assy., Hydraulic, Short ▲
8	91-1901		Cable Assy., Hydraulic, Medium ▲
8	91-1902		Cable Assy., Hydraulic, Long ▲
9	363-2371	1	Terminal Block, 3-Position
10		1	Surge Protector, Osmac ■
11	91-1865	1	Cover, Safety, Ac
12	91-1884	1	Adapter, Osmac, 13" X 8.5", Sst
13		1	Conduit Nipple, 1-1/4" ■
14		1	Locknut, 1-1/4" ■
15	91-1860	1	Cover, Osmac
16	363-3438	2	Screw, #10-32 X 3/4", Sst
17	91-1508	1	Cabinet Assy., Sst (Includes Items 17-19) ●
18		2	Door ■
19	363-5369	2	Lock Assy., W/Keys
20		1	Plate, Mounting ■
21		1	Electric/Hydraulic Convertor Module (See Electric-Hydraulic Converter Module Assy. Section) ■
22		1	Mounting Plate, Terminal Block ■
23	363-1553	1	Lug, Grounding
24	363-3263		Terminal Block, 9-Position ▲

● (Includes Items 17-19)
▲ Quantity Varies With Model
◆ Order Through Finished Goods Distribution System - Minneapolis
■ Not serviced separately

OSMAC Satellite - 13 x 13 Metal Ped, Electric

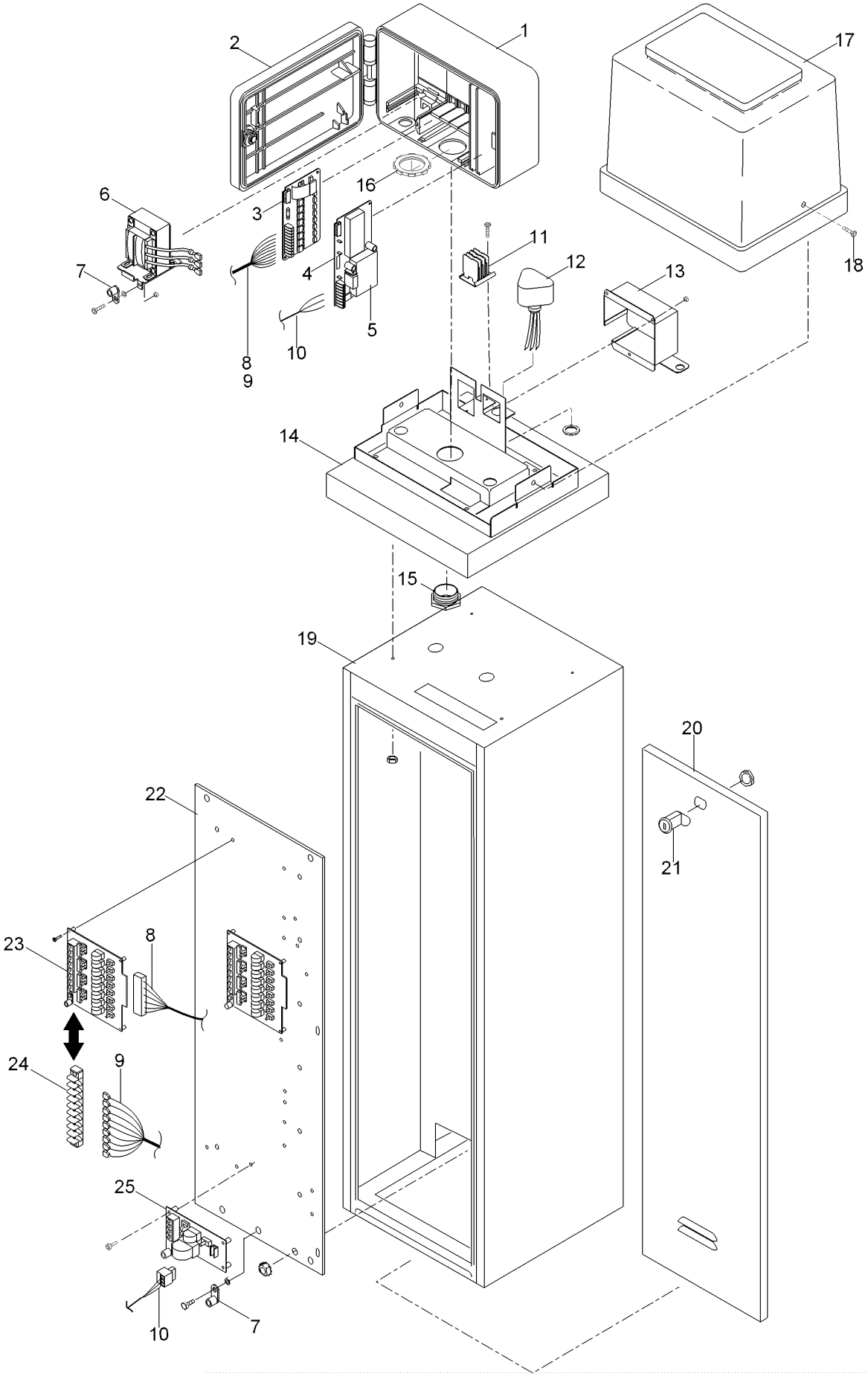

OSMAC Satellite - 13 x 13 Metal Ped, Electric (continued)

Ref.	Part Number	Qty.	Description
1		1	Housing, Rdr50 ●
2		1	Cover, Housing ●
3	NLN3491A	1	Output Pcb, 8-Station ▲
4	NLN3485	1	Decoder Module Rdr50 ▲
4	NLN3794	1	Decoder Module Rdr16 ▲
5	N1551-X	1	Receiver Module (See Finished Goods Price List For Specific Frequency) ▲
6	NPN8010	1	Transformer, 24 Vac ▲
7	363-1553	2	Lug, Grounding
8	91-1905		Cable Assy., Surge Protection, Short ■
8	91-1906		Cable Assy., Surge Protection, Medium ■
8	91-1907		Cable Assy., Surge Protection, Long ■
9	91-2151		Cable Assy., El, Short ■
9	91-2152		Cable Assy., El, Medium ■
9	91-2153		Cable Assy., El, Long ■
10	91-2433	1	Cable Assy., Pump/Common

Ref.	Part Number	Qty.	Description
11	363-2371	1	Terminal Block, 3-Position
12		1	Surge Protector, Osmac ●
12	89-6870	1	Surge Protector, Osmac
13	91-1865	1	Cover, Safety, Ac
14		1	Locknut, 1-1/4" ●
15		1	Conduit Nipple, 1-1/4" ●
16	91-1884	1	Adapter, Osmac, 13" X 8.5", Sst
17	91-1860	1	Cover, Osmac
18	363-3438	2	Screw, #10-32 X 3/4", Sst
19	89-7128	1	Cabinet Assy., Sst (Includes Items 17-19)
20		2	Door ●
21	363-5369	2	Lock Assy., W/Keys
22		1	Plate, Mounting ●
23	91-1957	1	Pcb, Surge Protection, 8-Station
24		1	Terminal Block, 9-Position ●
25	91-1305	1	Pcb Assy., Surge Protection, Pump/Com

● Not serviced separately
▲ Order Through Finished Goods Distribution System - Minneapolis
■ Quantity Varies With Model

OSMAC Satellite - 13 x 13 Metal Ped, Hydraulic

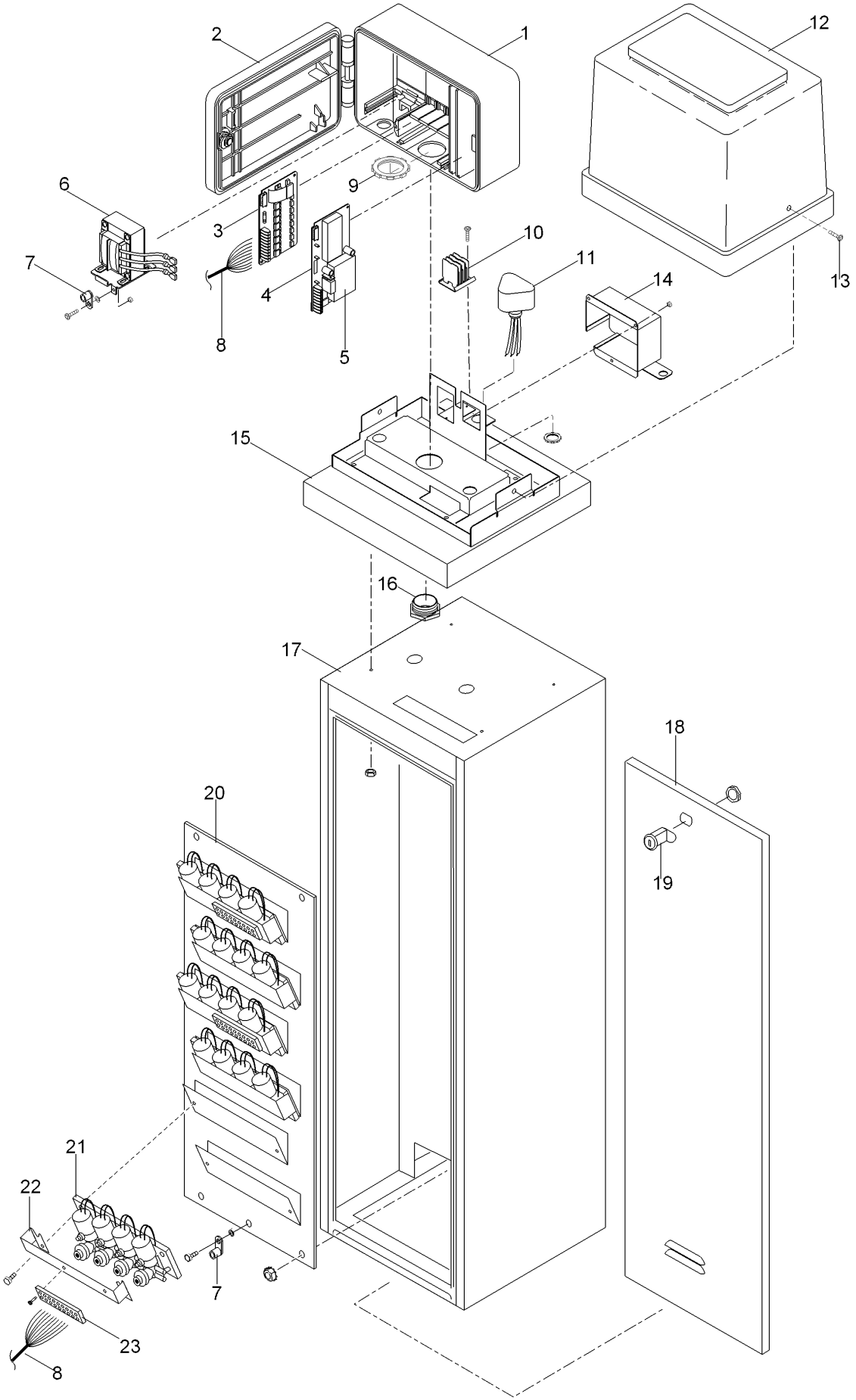

OSMAC Satellite - 13 x 13 Metal Ped, Hydraulic (continued)

Ref.	Part Number	Qty.	Description
1		1	Housing, Rdr50 ●
2		1	Cover, Housing ●
3	NLN3491A	1	Output Pcb, 8-Station ▲
4	NLN3485	1	Decoder Module Rdr50 ▲
4	NLN3794	1	Decoder Module Rdr16 ▲
5	N1551-X	1	Receiver Module (See Finished Goods Price List For Specific Frequency) ▲
6	NPN8010	1	Transformer, 24 Vac ▲
7	363-1553	1	Lug, Grounding
8	91-1899		Cable Assy., Hydraulic, Short ■
8	91-1901		Cable Assy., Hydraulic, Medium ■
8	91-1902		Cable Assy., Hydraulic, Long ■
9		1	Locknut, 1-1/4" ●
10	363-2371	1	Terminal Block, 3-Position
11		1	Surge Protector, Osmac ●
12	91-1860	1	Cover, Osmac
13	363-3438	2	Screw, #10-32 X 3/4", Sst
14	91-1865	1	Cover, Safety, Ac
15	91-1886	1	Adapter, Osmac, 13 X 13, Sst
16		1	Conduit Nipple, 11/4" ●
17	89-7128	1	Cabinet Assy., Sst (Includes Items 17-19)
18		2	Door ●
19	363-5369	2	Lock Assy., W/Keys
20			Plate, Mounting ● ■
21			Electric/Hydraulic Convertor Module (See Electric-Hydraulic Converter Module Assy. Section) ● ■
22			Bracket Support, Electric/Hydraulic Converter ● ■
23	363-3263		Terminal Block, 9-Position ■

● Not serviced separately
▲ Order Through Finished Goods Distribution System - Minneapolis
■ Quantity Varies With Model

OSMAC Satellite - Plastic Pedestal, Electric

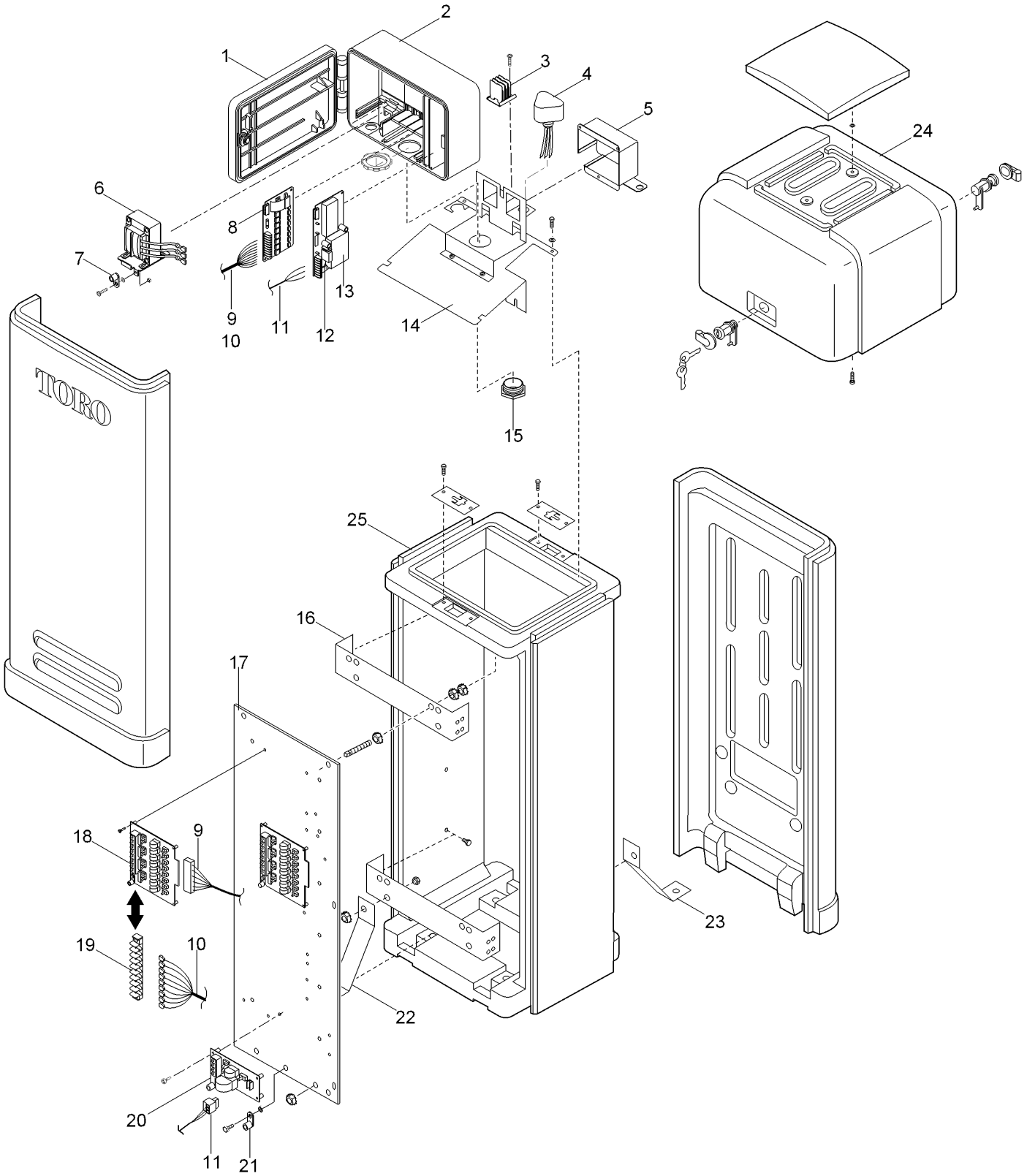

OSMAC Satellite - Plastic Pedestal, Electric (continued)

Ref.	Part Number	Qty.	Description
1		1	Cover, Housing ●
2		1	Housing, Rdr50 ●
3	363-2371	1	Terminal Block, 3-Position
4		1	Surge Protector, Osmac ●
5	91-1865	1	Cover, Safety, Ac
6	NPN8010	1	Transformer, 24 Vac ▲
7	363-1553	2	Lug, Grounding
8	NLN3491A	1	Output Pcb, 8-Station ▲
9	91-1905		Cable Assy., Surge Protection, Short ■
9	91-1906		Cable Assy., Surge Protection, Medium ■
9	91-1907		Cable Assy., Surge Protection, Long ■
10	91-2151		Cable Assy., El, Short ■
10	91-2152		Cable Assy., El, Medium ■
10	91-2153		Cable Assy., El, Long ■
11	91-2433	1	Cable Assy., Pump/Common
12	NLN3485	1	Decoder Module Rdr50 ▲
12	NLN3794		Decoder Module Rdr16 ▲
13	N1551-X	1	Receiver Module (See Finished Goods Price List For Specific Frequency) ▲
14		1	Adapter, Osmac, Stainless Steel ●
15		1	Conduit Nipple, 1.25" ●
16	89-8225SK	2	Bracket
17	91-1441	2	Mounting Plate, Rear
18	91-1957		Pcb, Surge Protection, 8-Station ■
19	363-3263		Terminal Block, 9-Position ■
20	91-1305	1	Pcb Assy., Surge Protection, Pump/Com
21	363-1553	1	Lug, Grounding
22	89-8327SK	1	Bracket Support
23	89-8326SK	1	Bracket Support, Offset
24	89-8344	1	Cover, Plastic, Tall
25		1	See Plastic Satellite Pedestal Section For Details. ●

● Not serviced separately
▲ Order Through Finished Goods Distribution System - Minneapolis
■ Quantity Varies With Model

OSMAC Satellite - Plastic Pedestal, Hydraulic

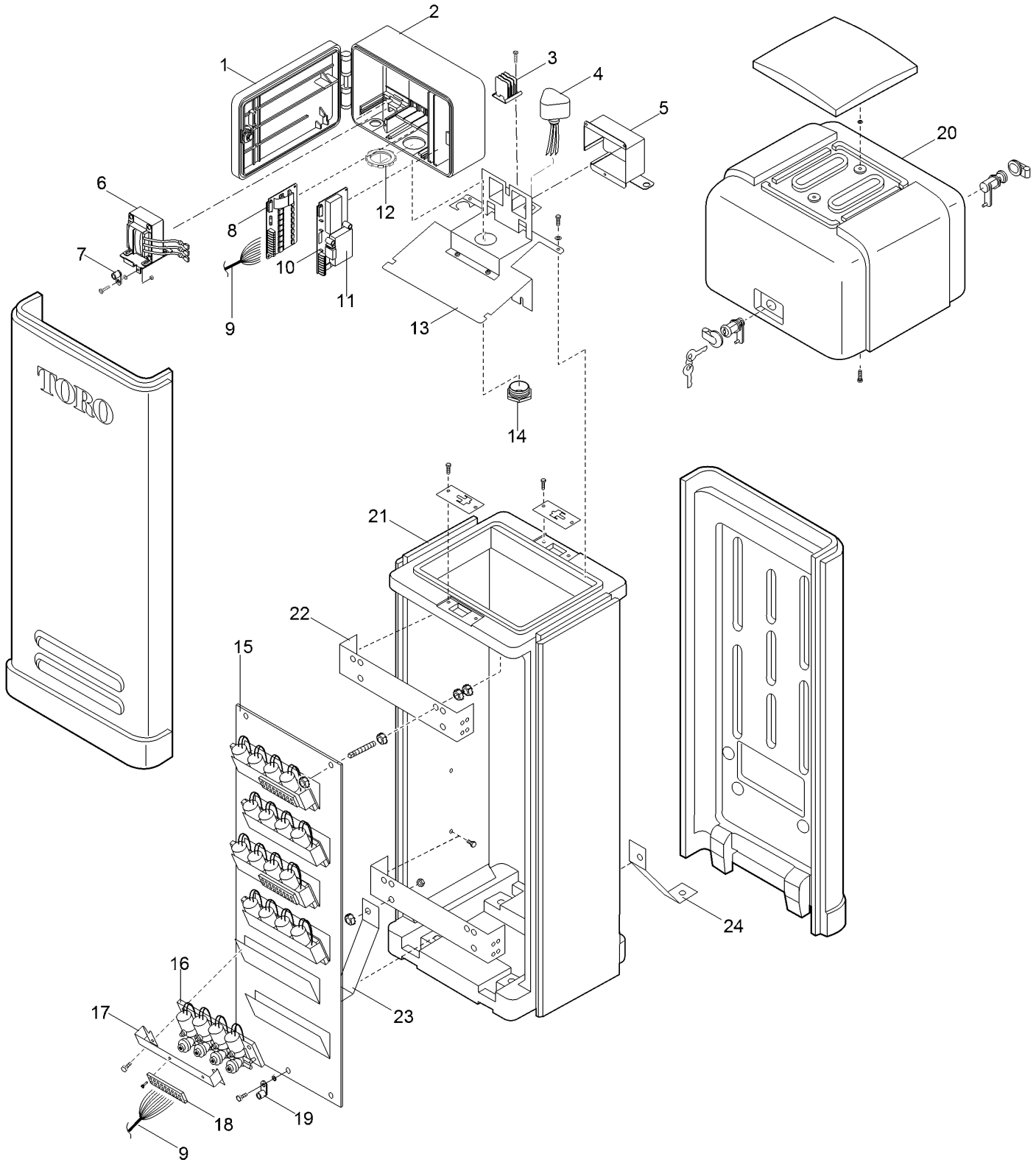

OSMAC Satellite - Plastic Pedestal, Hydraulic (continued)

Ref.	Part Number	Qty.	Description
1		1	Cover, Housing ●
2		1	Housing, Rdr50 ●
3	363-2371	1	Terminal Block, 3-Position
4		1	Surge Protector, Osmac ●
5	91-1865	1	Cover, Safety, Ac
6	NPN8010	1	Transformer, 24 Vac ▲
7	363-1553	2	Lug, Grounding
8	NLN3491A	1	Output Pcb, 8-Station ▲
9	91-1899		Cable Assy., Hydraulic, Short ■
9	91-1901		Cable Assy., Hydraulic, Medium ■
9	91-1902		Cable Assy., Hydraulic, Long ■
10	NLN3485	1	Decoder Module Rdr50 ▲
10	NLN3794	1	Decoder Module Rdr16 ▲
11	N1551	1	Receiver Module (Specify Frequency) ▲
12	363-3259	1	Locknut 1.25"
13		1	Adapter, Osmac, Stainless Steel ●
14	363-3258	1	Conduit Nipple, 1.25"
15		2	Plate, Mounting ●
16			Electric/Hydraulic Convertor Module (See Electric-Hydraulic Converter Module Assy. Section) ●■
17	91-1562		Mounting Plate, Terminal Block ■
18	363-3263		Terminal Block, 9-Position ■
19	363-1553	1	Lug, Grounding
20	89-8344	1	Cover, Plastic, Tall
21		1	See Plastic Satellite Pedestal Section For Details. ●
22	89-8225SK	2	Bracket
23	89-8327SK	1	Bracket Support
24	89-8326SK	1	Bracket Support, Offset

● Not serviced separately
▲ Order Through Finished Goods Distribution System - Minneapolis
■ Quantity Varies With Model

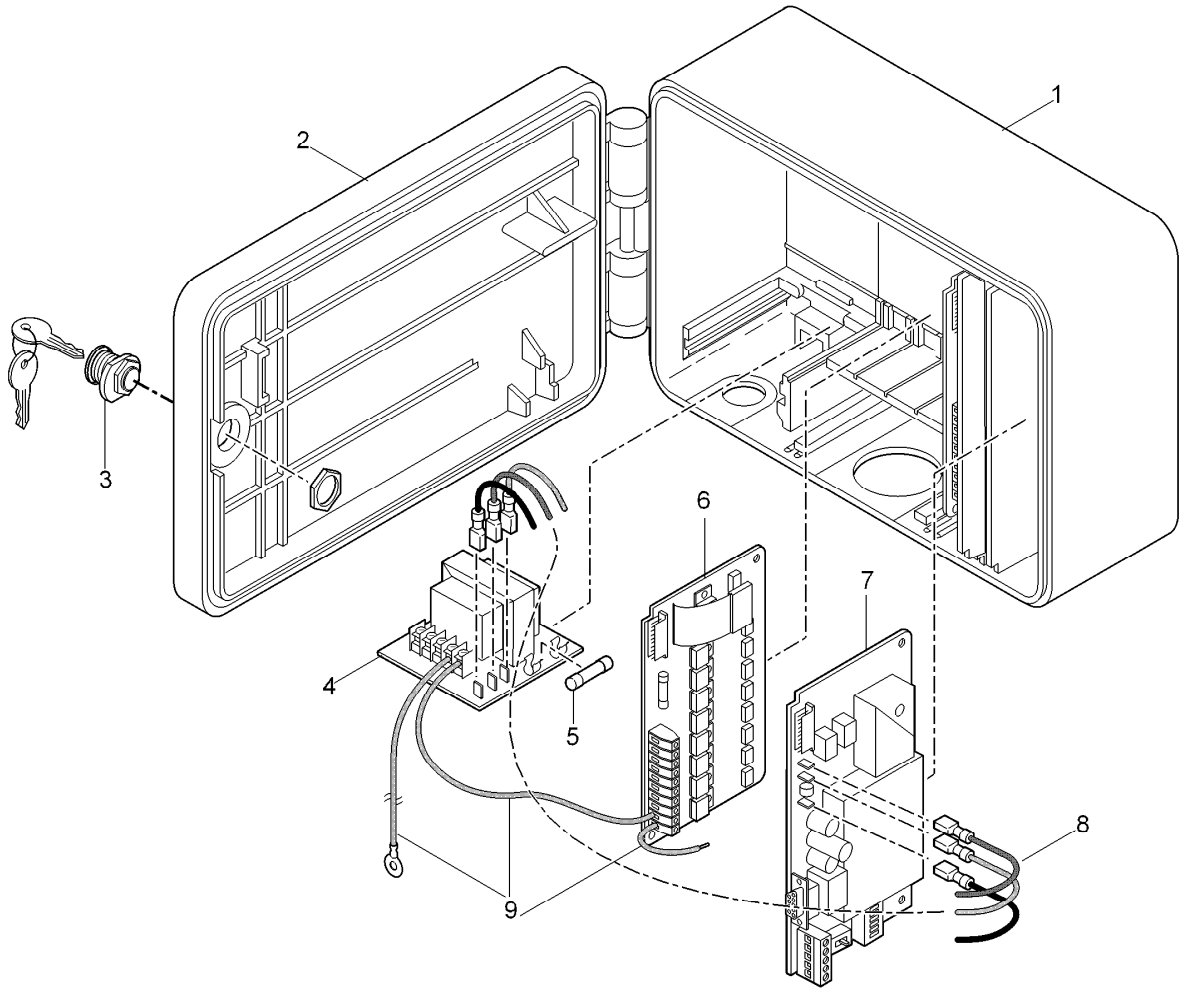

OSMAC RDR - Model RDR0160LVNO

Ref.	*Part Number*	*Qty.*	*Description*
1	102-2921	1	Kit, Osmac Rdr Housing
2	102-2920	1	Kit, Osmac Rdr Housing Cover (Includes Item 3)
3	363-4120	1	Lock Assy. W/Keys
4	102-3067	1	24 To 12 V A.C. Transformer Board
5	102-3068	1	2A Slow-Blow Fuse
6	NLN3491A	2	Output Pcb, 8-Station ●
7	102-1828	1	Pcba, Osmac, Narrow-Band Decoder
8	102-3069	1	Kit, Power Wires, Rdr Lv
9	102-3077	1	Kit, Ground Wires (3)

● Order Through Finished Goods Distribution System - Minneapolis

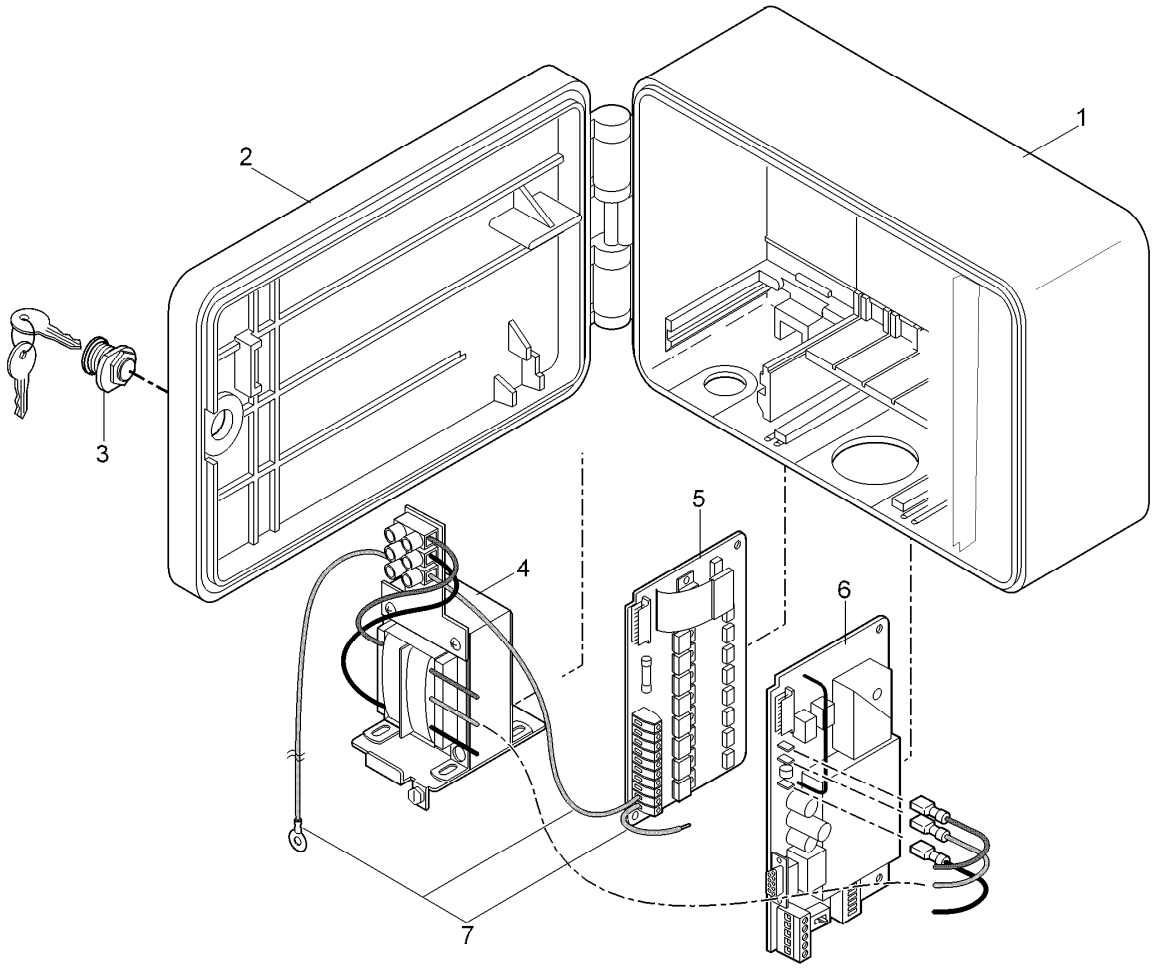

OSMAC RDR - Model RDR0160LVCE

Ref.	Part Number	Qty.	Description
1	102-2921	1	Kit, Osmac Rdr Housing
2	102-2920	1	Kit, Osmac Rdr Housing Cover
3	363-4120	1	Lock Assy. W/Keys
4	102-3076	1	24 To 12 V A.C. Transformer W/Terminal Block
5	NLN3491A	2	Output Pcb, 8-Station ●
6	102-1828	1	Pcba, Osmac, Narrow-Band Decoder
7	102-3077	1	Kit, Ground Wires (3)

● Order Through Finished Goods Distribution System - Minneapolis

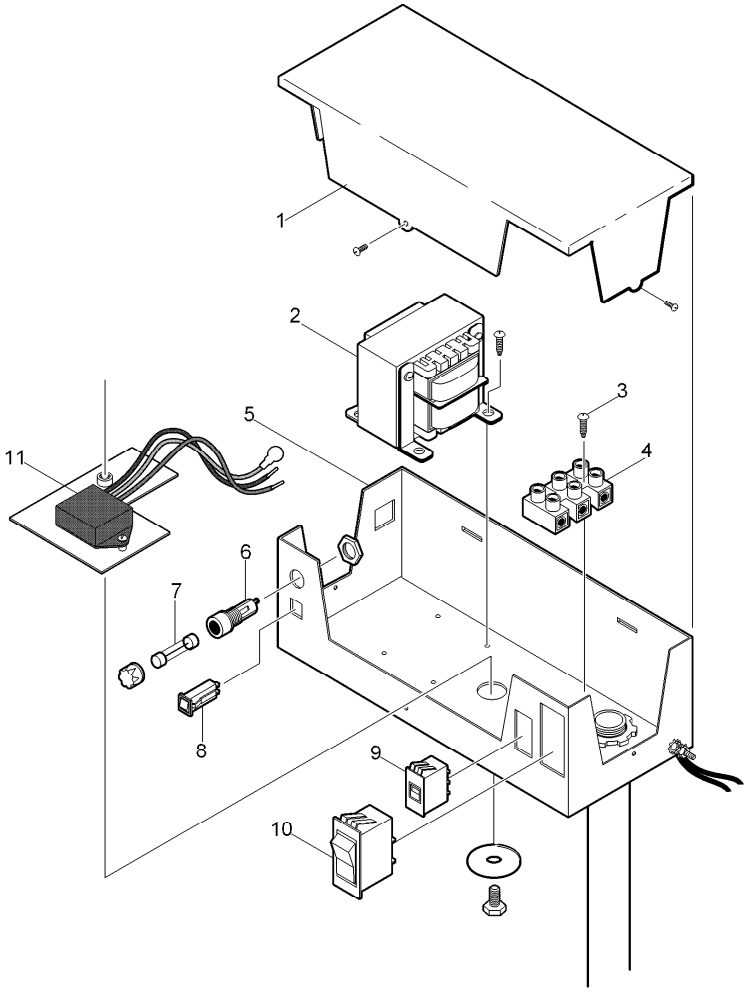

OSMAC RDR Unit - Power Supply Assembly

Ref.	Part Number	Qty.	Description
1		1	Cover ■
2	102-0647	1	Transformer Assy., Svc. ●
3		6	Screw, Tap, #6 ■
4	102-0667	1	Terminal Block, 115/230V, (Includes Item 3)
5		1	Bracket, Rdr Power Supply ■
6	102-0649	1	Fuse Holder W/Cap
7	102-0650	1	Fuse, 3.2 Amp, Slow-Blow (10-Pack) ●
8	102-0651	1	Circuit Breaker, 4.0 Amp
9	102-0648	1	Slide Switch 115/230V
10	102-0666	1	On/Off Switch
11	118-0538SK-RDR	1	Surge Protector Assy.

● SERVICE ITEMS

■ Not serviced separately

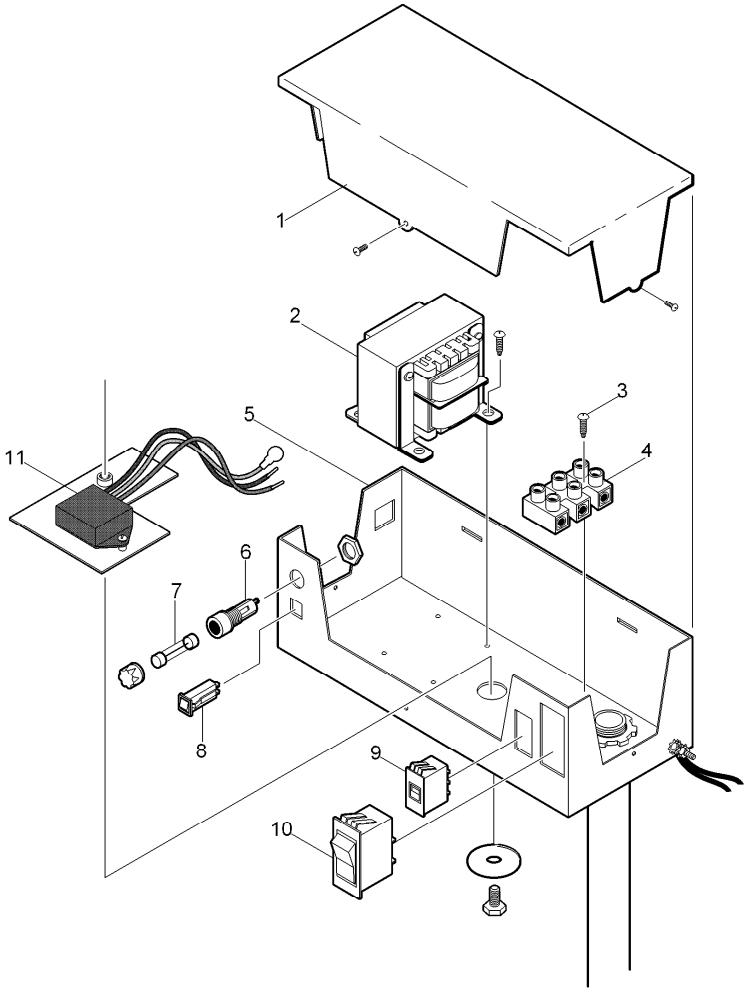

OSMAC RDR Unit - Power Supply Assembly (continued)

● SERVICE ITEMS

■ Not serviced separately

Plastic Satellite Pedestal 2006 And Earlier Models

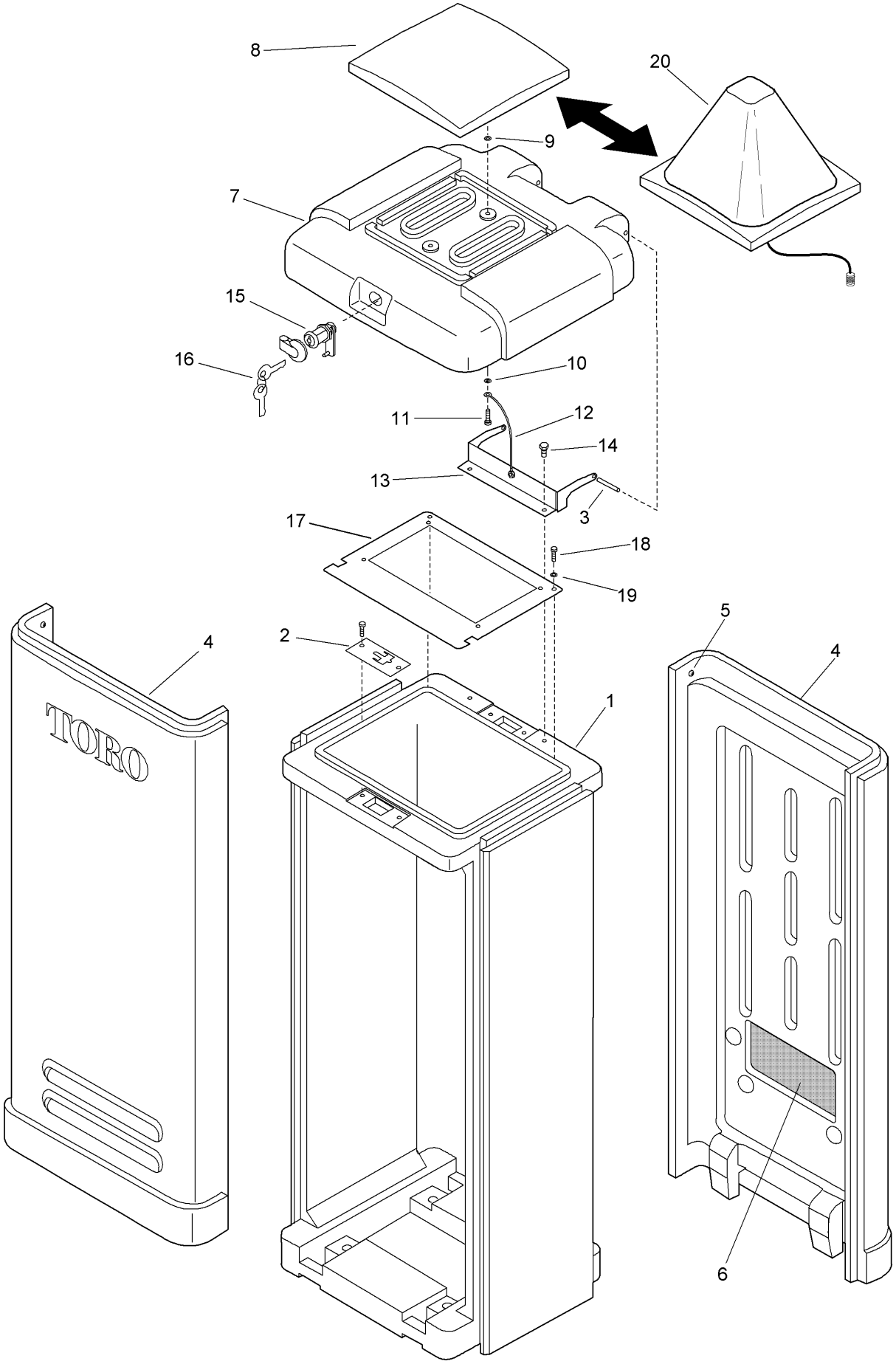

Plastic Satellite Pedestal 2006 And Earlier Models (continued)

Ref.	Part Number	Qty.	Description
1	89-8348	1	Base Assy., Service (Includes Items 2 & 3) ●
2	102-6155	1	Plate, Locking
3	363-3539	2	Pin
4	89-8347	1	Door Assy., Service ●
5		2	Detent Latch Assy., Door ■
6		2	Air Filter, Foam ■
7	89-8345	1	Cover Assy., Standard, Service (Includes Items 8-16) ●
8	89-8355	1	Vent Cap Assy., Service (Includes Items 9-11) ●
9		2	Washer, Silicone ■
10		2	Washer, Flat ■
11	363-3438	1	Screw, #10-32 X 3/4", Sst
12	102-3086	1	Cable, Restraining
13	102-5915	1	Hinge, Cover
14	360-0595	2	Screw, Machine, 1/4-20 X 1/2"
15	89-8346	1	Lock Kit, Service (Includes Items 15, 16 & Lock Cover) ●
16	360-0565	2	Keys, Lock (Golf #1382)
17	102-0664	1	Mounting Plate, Tm
18	363-3541	2	Screw, Trim, #6
19	363-3542	2	Washer, Finish, #6
20	102-3126		Dome Antenna Assy., Used In Vp / Ltc+ And E-Osmac (2006 And Later Models)

● SERVICE ITEMS

■ Not serviced separately

Plastic Satellite Pedestal 2007-2010 Models

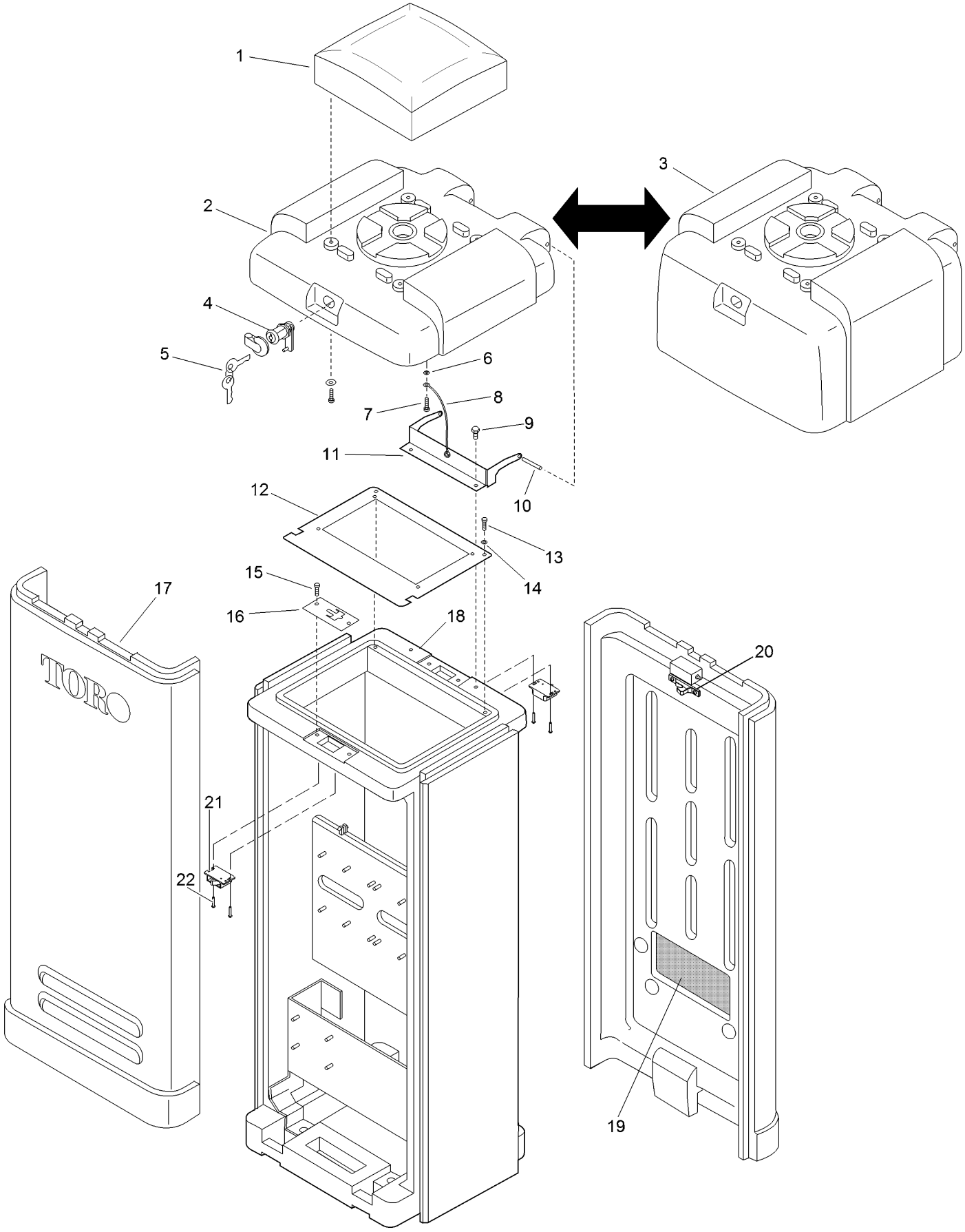

Plastic Satellite Pedestal 2007-2010 Models (continued)

Ref.	Part Number	Qty.	Description
1	102-4778SK	1	Cap, Vent, Green
2	102-6147SK	1	Cover, Plastic, Green (Includes Items 1-11)
3	102-6148SK	1	Cover, Plastic, Rdr
4	89-8346	1	Lock Kit, Service ●
5	360-0565	2	Keys, Lock
6		2	Washer, Flat ■
7	363-3438	1	Screw, #10-32 X 3/4", Sst
8	102-3086	1	Cable, Restraining
9	360-0595	2	Screw, Machine, 1/4-20 X 1/2"
10	363-3539	2	Pin
11	102-5915	1	Hinge, Cover
12	102-0664	1	Mounting Plate, Tm
13	363-3541	2	Screw, Trim, #6
14	363-3542	2	Washer, Finish, #6
15	363-3707	2	Screw-PPH
16	102-6155	1	Plate, Locking
17	102-6146SK	2	Door, Plastic Pedestal, Green (Includes Items 17 And 19)
18	102-4775SK	1	Base, Plastic Pedestal, Green (Includes Items 15, 16 And 18)
19		2	Air Filter, Foam ■
20	363-9527SK	2	Keeper
21	363-9526SK	2	Catch
22	363-9529	4	Screw, #6 X 3/4

● SERVICE ITEMS

■ Not serviced separately

Plastic Satellite Pedestal 2011 and Later

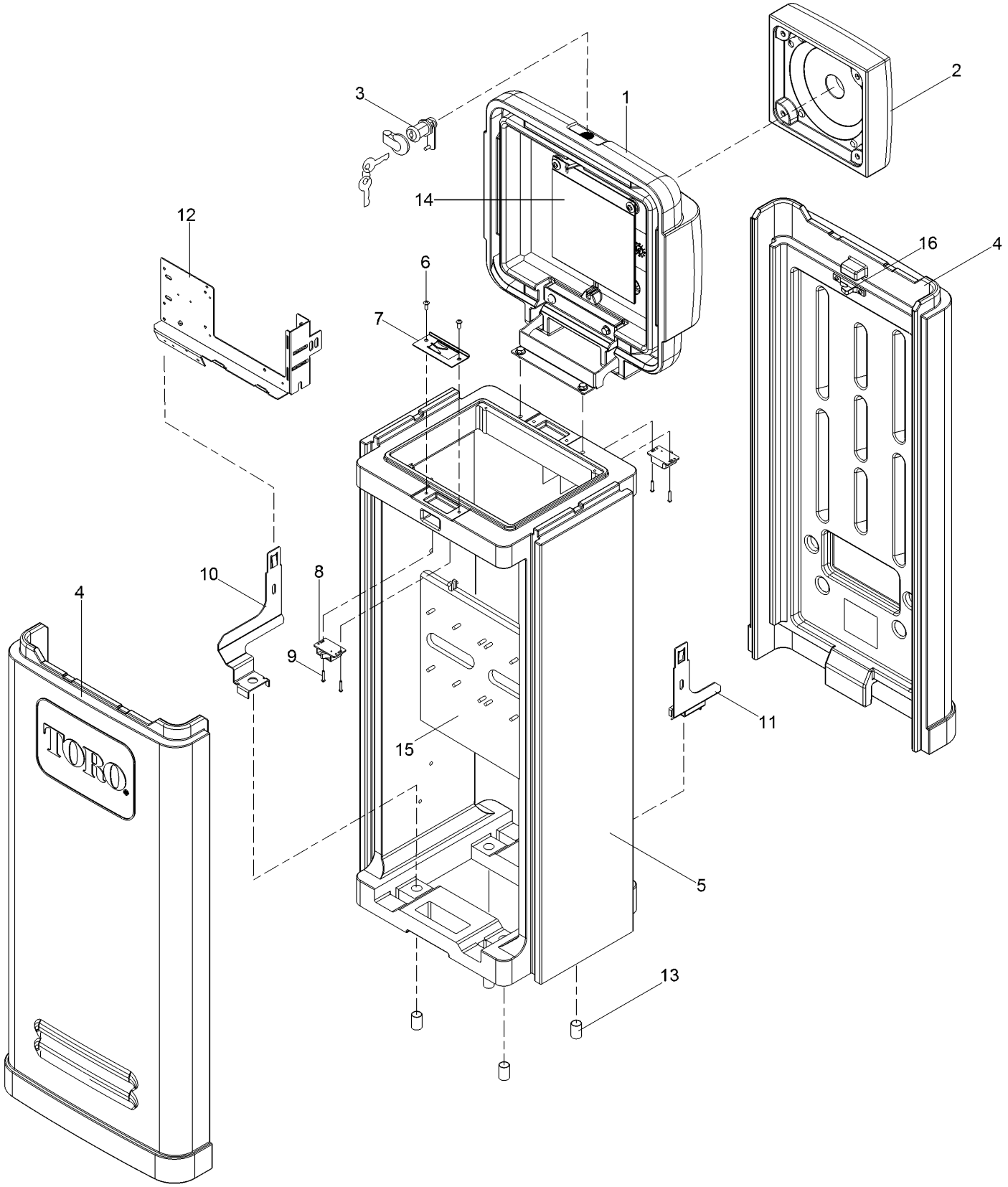

Plastic Satellite Pedestal 2011 and Later (continued)

Ref.	Part Number	Qty.	Description
1	118-0825SK	1	Assy., Short Cover, Green (Includes Items 2 And 3)
1	118-0826SK	1	Assy., Short Cover, Desert Sand (Includes Items 2 And 3)
1	118-0827SK	1	Assy., Short Cover, Tree Bark (Includes Items 2 And 3)
2	102-4778SK	1	Ventcap, Plastic Pedestal, Green
2	102-6958SK	1	Ventcap, Plastic Pedestal, Desert Sand
2	102-6959SK	1	Ventcap, Plastic Pedestal, Tree Bark
3	89-8346	1	Lock Kit, Service ●
4	118-0833SK	2	Door Assy., Plastic Pedestal, Green
4	118-0834SK	2	Door Assy., Plastic Pedestal, Desert Sand
4	118-0835SK	2	Door Assy., Plastic Pedestal, Tree Bark
5	102-4775SK	1	Kit, Service, Base, Pedestal, Green
5	102-6491SK	1	Plastic Pedestal Base, Desert Sand
5	102-6483SK	1	Plastic Pedestal Base, Tree Bark
6	363-3707	2	Screw-PPH
7	102-9312	1	Plate, Pedestal Latch, Rohs
8	363-9526SK	2	Catch
9	363-9529	4	Screw, #6 X 3/4", Ss
10	102-8399SK	1	Bracket, Transformer Support, Right
11	102-8400SK	1	Bracket, Transformer Support, Left
12	102-8402SK	1	Transformer Mounting Plate
13	102-4774	4	Seamless Tube, Ss, 11/16" X 1.00", Rohs
14	118-0740	1	Holder, Document
15	89-9931SK	1	Backplate Mounting
16	363-9527SK	2	Keeper
	118-1666SK	1	Pedestal, Retrofit Kit, Green (Includes Items 1-4) ■
	118-1667SK	1	Pedestal, Retrofit Kit, Tree Bark (Includes Items 1-4) ■
	118-1668SK	1	Pedestal, Retrofit Kit, Desert Sand (Includes Items 1-4) ■
	118-0828SK	1	Complete Pedestal, Green (Inlcudes Items 1-9 And 13) ■
	118-0829SK	1	Complete Pedestal, Tree Bark (Inlcudes Items 1-9 And 13) ■
	118-0830SK	1	Complete Pedestal, Desert Sand (Inlcudes Items 1-9 And 13) ■

● SERVICE ITEMS

■ Not illustrated